# PUBLIC WORKS

# DETAIL PLATES

## CITY OF HUDSON, WISCONSIN

## 2014

# TABLE OF CONTENTS

## DETAIL PLATES


**PLATE NO. SANITARY SEWER**

SAN-1 Sanitary Sewer Manhole
SAN-2 Sanitary Sewer Junction Manhole
SAN-3 Sanitary Sewer Drop Inlet Manhole

**PLATE NO. STORM SEWER**

STO-1 Storm Sewer Manhole
STO-2 Storm Sewer Junction Manhole
STO-3 Catch Basin Manhole
STO-4 Type II Catch Basin
STO-5 Precast Shallow Storm Sewer Structure
STO-6 Concrete Encased Casting On Type II Catch Basin
STO-7 Flared End Section and Trash Guard
STO-8 Rip Rap at Outlets
STO-9 PVC Perforated Pipe Below Concrete Curb

**PLATE NO. PIPE BEDDING**

BED-1 Bedding Methods for RCP, VCP, and DIP
BED-2 Bedding Methods for PVC

**PLATE NO. WATER MAIN**

See Most Recent Hudson Public Water Utility
Water Distribution Technical Specification

**PLATE NO. SERVICES AND UTILITIES**

SER-1 Service Connection to RCP
SER-2 Service Riser
SER-3 Service Line Cleanouts
SER-4 Multi-Family Sewer and Water Service
SER-5 Sewer and Water Service Connections
SER-9 Typical Utility Locations
SER-10 Typical Utilities – Joint Trench Construction

**PLATE NO. EROSION**

ERO-1 Rock Construction Entrance
ERO-2 Siltation Fence
ERO-3 Inlet Protection for Catch Basin
ERO-4 Inlet Protection for Beehive Catch Basin
ERO-5 Inlet Protection Rock Filter for Catch Basin
ERO-6 Catch Basin Inlet Protection for After Paving
ERO-7 Ditch Blocking
ERO-8 Temporary Slope Grading

| PLATE NO. | STREETS |
|---|---|
| STR-1 | Concrete Curb and Gutter |
| STR-2 | Surmountable and Driveway Curb and Gutter |
| STR-3 | Residential Driveway Section |
| STR-3A | Alley Driveway Section |
| STR-5 | Commercial Driveway Concrete Apron With Curb |
| STR-6A | Surmountable Curb and Gutter Construction at Catch Basin (1 of 2) |
| STR-6B | Surmountable Curb and Gutter Construction at Catch Basin (2 of 2) |
| STR-7A | D18 Curb and Gutter at Catch Basin (1 of 2) |
| STR-7B | D18 Curb and Gutter at Catch Basin (2 of 2) |
| STR-8A | D24 Curb and Gutter at Catch Basin (1 of 2) |
| STR-8B | D24 Curb and Gutter at Catch Basin (2 of 2) |
| STR-9A | D30 Curb and Gutter at Catch Basin (1 of 2) |
| STR-9B | D30 Curb and Gutter at Catch Basin (2 of 2) |
| STR-10 | Concrete Curb and Gutter Transition |
| STR-10A | Concrete Curb and Gutter Replacement |
| STR-11 | Pedestrian Ramp (Bituminous Pathway) |
| STR-12 | Pedestrian Ramp (Concrete Sidewalk) |
| STR-13 | Double Pedestrian Curb Ramp General Location |
| STR-14 | Typical Concrete Sidewalk |
| STR-15 | Typical Bituminous Pathway |
| STR-16 | Structure Adjustments (Bituminous or Concrete) |
| STR-17 | Concrete Adjustment Ring Detail |
| STR-18 | Permanent Barricade |
| STR-19 | Typical Commercial Cul-De-Sac for 50’ and 60’ Right-of-Ways |
| STR-20 | Typical Residential Cul-De-Sac With Center Island for 50’ and 60’ Right-of-Ways |
| STR-21 | Typical Eccentric Cul-De-Sac for 50’ and 60’ Right-of-Ways |
| STR-22 | 37’ - 8” Commercial Light |
| STR-23 | 35’ - 8” Commercial Light |
| STR-24 | Concrete Base for up to 40’ Lighting Standards |
| STR-25A | 30’ - 8” Commercial Light – Tapered Aluminum Pole (1 of 2) |
| STR-25B | 30’ - 8” Commercial Light – Elliptical Truss Arm (2 of 2) |

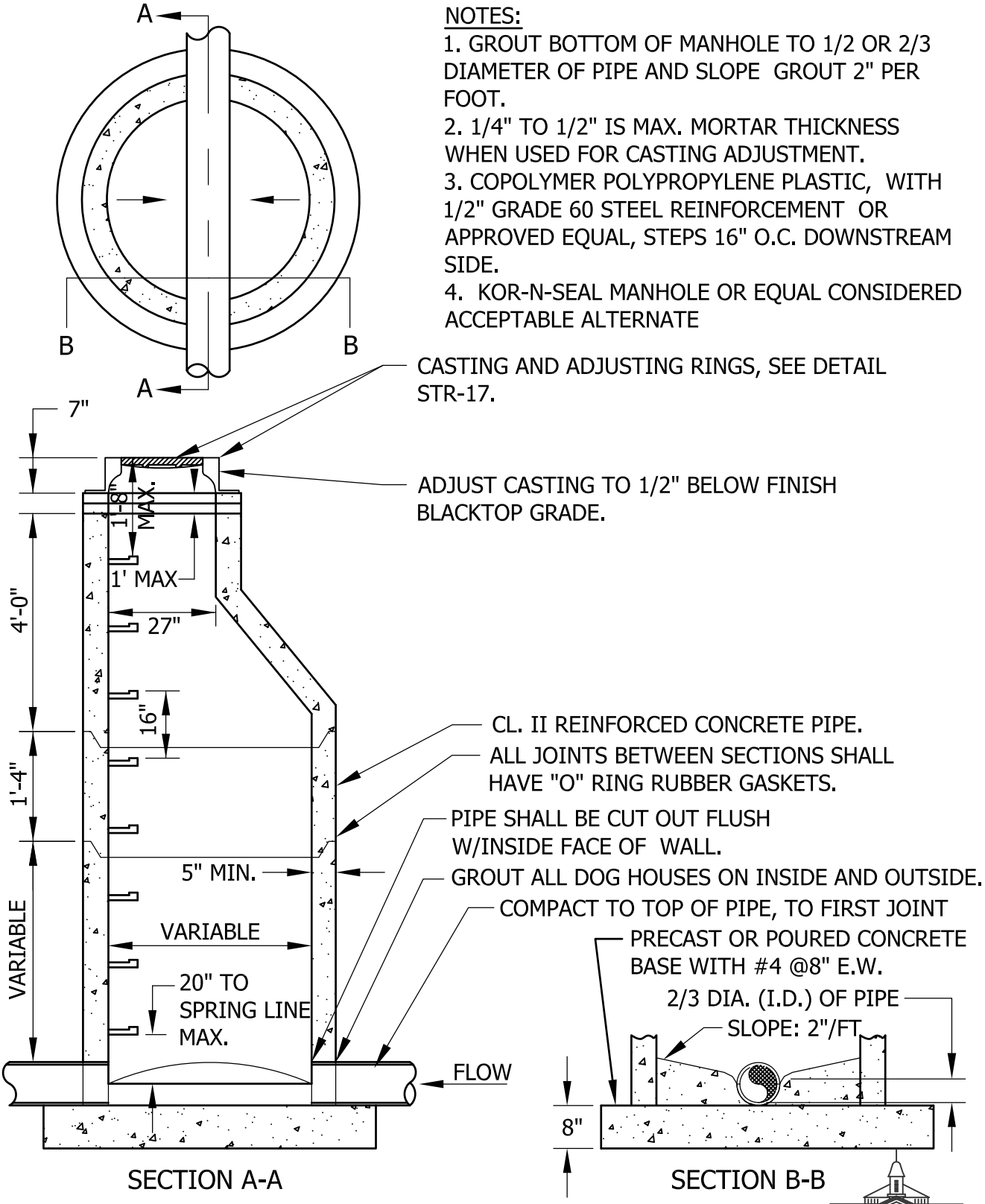


NOTES:

1. GROUT BOTTOM OF MANHOLE TO 1/2 OR 2/3 DIAMETER OF PIPE AND SLOPE GROUT 2" PER FOOT.
2. 1/4" TO 1/2" IS MAX. MORTAR THICKNESS WHEN USED FOR CASTING ADJUSTMENT.
3. COPOLYMER POLYPROPYLENE PLASTIC, WITH 1/2" GRADE 60 STEEL REINFORCEMENT OR APPROVED EQUAL, STEPS 16" O.C. DOWNSTREAM SIDE.
4. KOR-N-SEAL MANHOLE OR EQUAL CONSIDERED ACCEPTABLE ALTERNATE

SECTION A-A

SECTION B-B

# SANITARY SEWER MANHOLE

HUDSON, WISCONSIN

PLATE NO. SAN-1

MARCH 2013

Hudson, WI

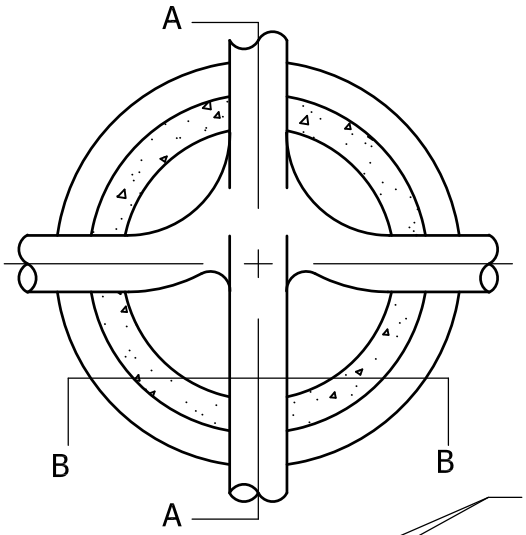


NOTES:

1. GROUT BOTTOM OF MANHOLE TO 2/3 DIAMETER OF PIPE AND SLOPE GROUT 2" PER FOOT.
2. 1/4" TO 1/2" IS MAX. MORTAR THICKNESS WHEN USED FOR CASTING ADJUSTMENT.
3. COPOLYMER POLYPROPYLENE PLASTIC, WITH 1/2" GRADE 60 STEEL REINFORCEMENT OR APPROVED EQUAL, STEPS 16" O.C. DOWNSTREAM SIDE.
4. KOR-N-SEAL MANHOLE OR EQUAL CONSIDERED ACCEPTABLE ALTERNATE.

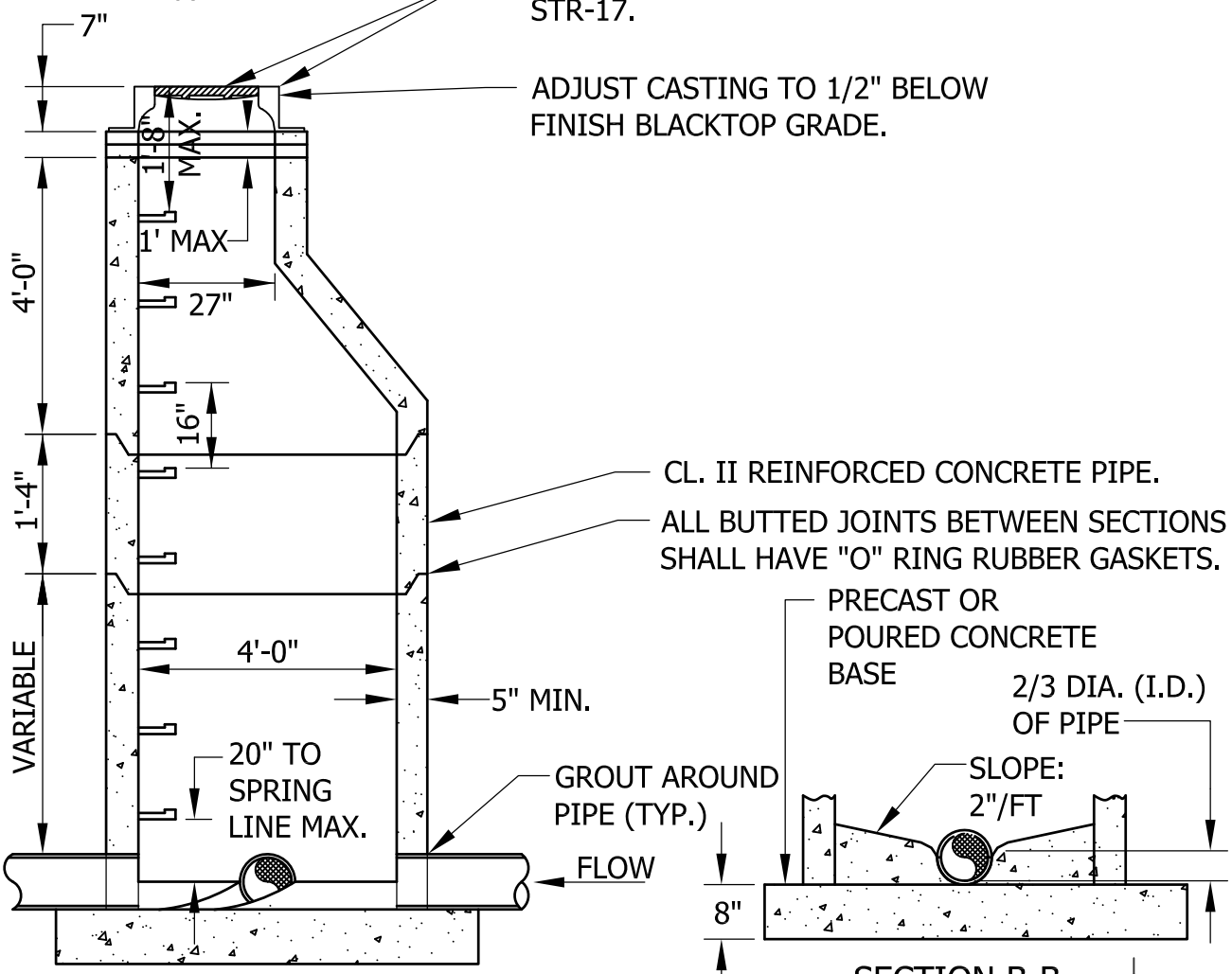


SECTION A-A

SECTION B-B

SANITARY SEWER JUNCTION MANHOLE

HUDSON, WISCONSIN

PLATE NO. SAN-2

MARCH 2013

Hudson, WI

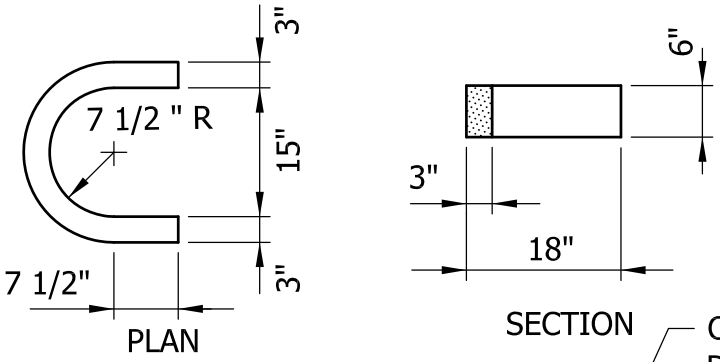


| CASTING | A | B |
|---|---|---|
| R1642B | 27" | 7" |

## HORSESHOE DETAILS

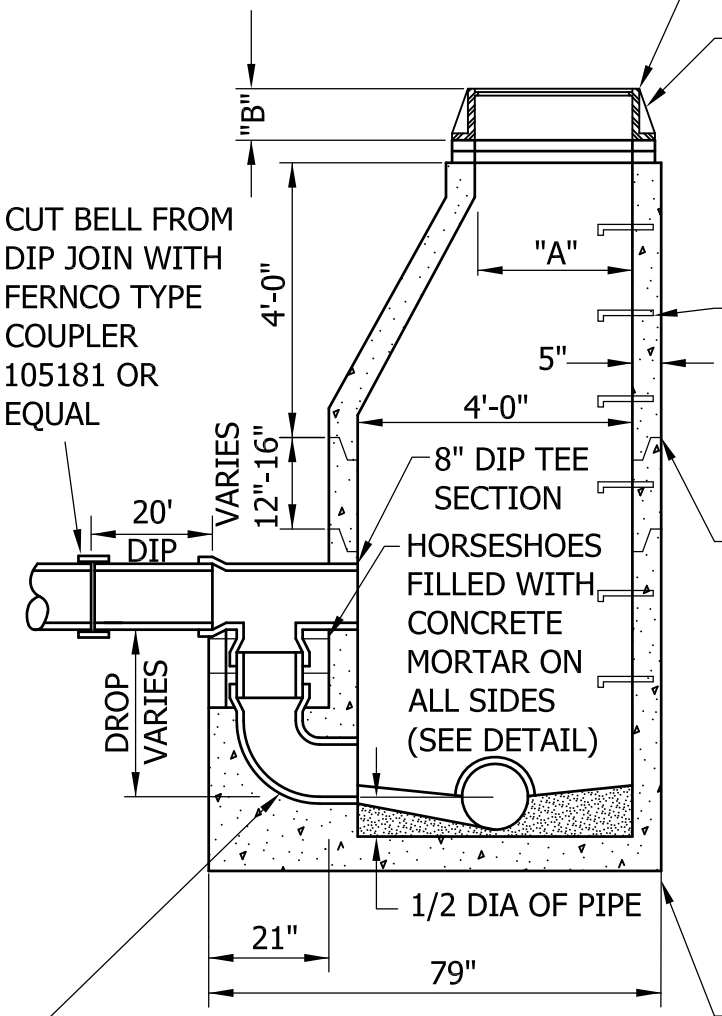


CUT BELL FROM DIP JOIN WITH FERNCO TYPE COUPLER 105181 OR EQUAL

CASTING AND ADJUSTING RINGS, SEE DETAIL STR-17.

ADJUST CASTING TO 1/2" BELOW FINISH BLACKTOP GRADE.

MANHOLE STEPS AS SPECIFIED, 16" ON CENTER. MANHOLE STEPS SHALL BE PLACED SO THAT OFFSET VERTICAL PORTION OF CONE IS FACING DOWNSTREAM.

ALL JOINTS IN MANHOLE TO HAVE "O" RING RUBBER GASKETS. PRECAST INVERT IS REQUIRED. PIPE SHALL BE CUT OUT FLUSH WITH INSIDE FACE OF WALL.

NOTE: KOR-N-SEAL MANHOLE OR EQUAL CONSIDERED ACCEPTABLE ALTERNATE. ALL DOG HOUSES SHALL BE GROUTED ON THE INSIDE AND OUTSIDE. PRECAST INVERT SHOULD BE 1/2 DIAMETER OF PIPE AND BENCHES SLOPED 2" TOWARD INVERT.

MINIMUM THICKNESS OF PRECAST BASE IS 6" FOR 14' DEEP OR LESS, AND INCREASES 1" IN THICKNESS FOR EVERY 4' OF DEPTH GREATER THAN 14' DEEP.

PRECAST 8"-1/4 BEND INTEGRAL WITH BASE SECTION

## SECTION

SANITARY SEWER DROP INLET MANHOLE

HUDSON, WISCONSIN

PLATE NO. SAN-3

MARCH 2013

Hudson, WI

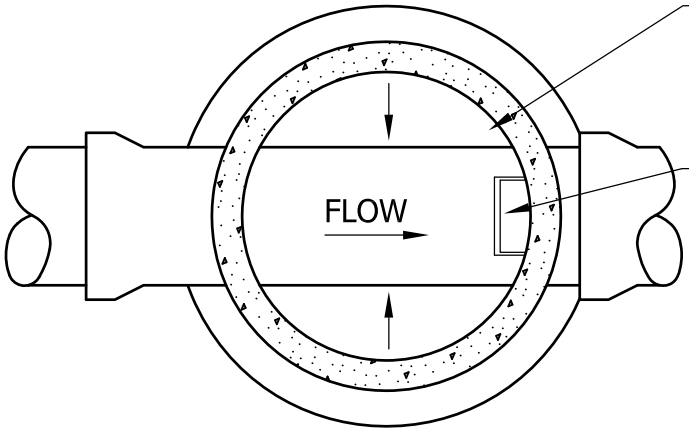


GROUT BOTTOM OF MANHOLE TO 1/2 DIAMETER AT PIPE AND SLOPE GROUT 2" TOWARD INVERT.

MANHOLE STEPS SHALL BE PLACED SO THAT OFFSET VERTICAL PORTION OF CONE IS FACING DOWNSTREAM.

NO BLOCK STRUCTURES ARE ALLOWED.

PLAN

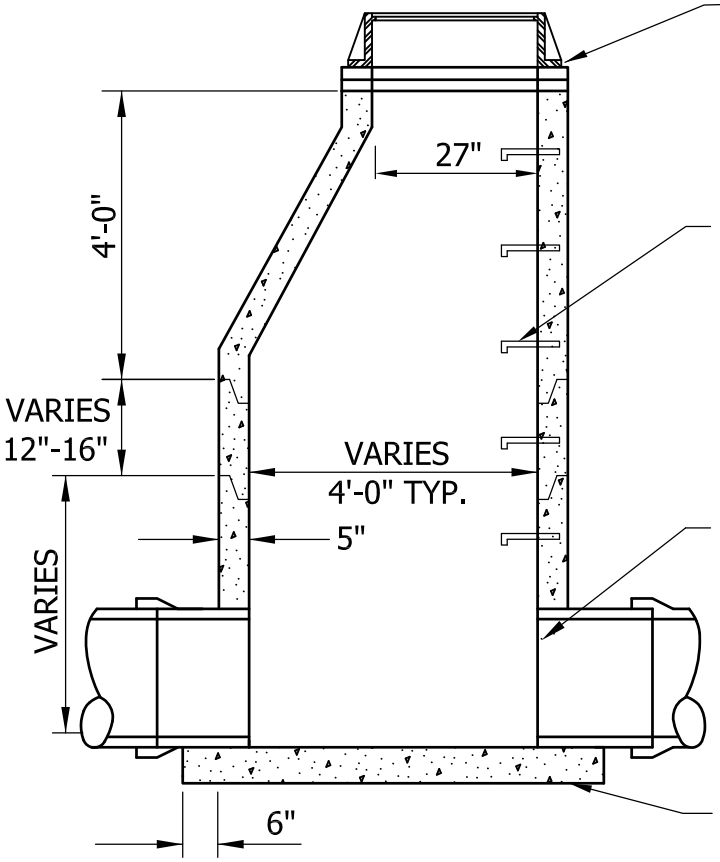


CASTING AND ADJUSTMENT RINGS, SEE DETAIL STR-17.

MANHOLE STEPS, NEENAH R1981J OR EQUAL, 16" ON CENTER.

ALL JOINTS IN MANHOLE TO HAVE "O" RING RUBBER GASKETS.

PIPE SHALL BE CUT OUT FLUSH WITH INSIDE FACE OF WALL.

DOGHOUSES MUST BE GROUTED BOTH INSIDE AND OUTSIDE.

MINIMUM SLAB THICKNESS IS 6" FOR 14' DEPTH. INCREASE THICKNESS 1" FOR EVERY 4' OF DEPTH GREATER THAN 14' AND REINFORCE WITH 6" X 6" MESH.

SECTION

STORM SEWER MANHOLE

HUDSON, WISCONSIN

PLATE NO. STO-1

MARCH 2013

Hudson, WI

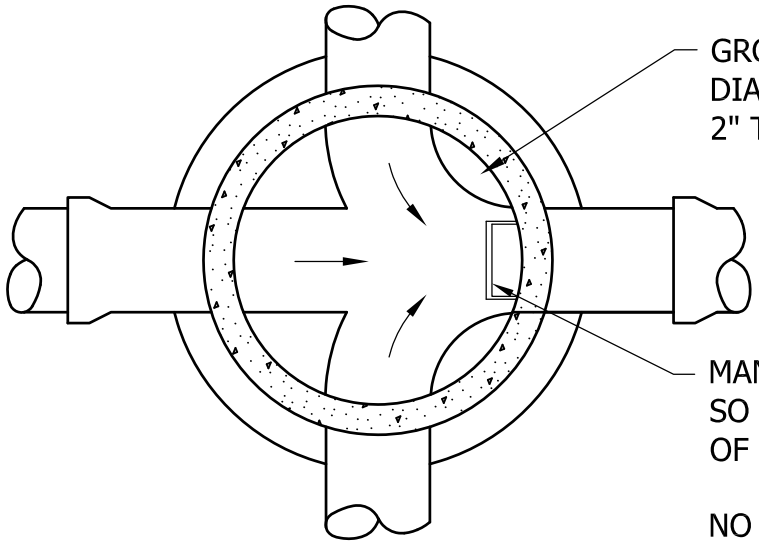

GROUT BOTTOM OF MANHOLE TO 1/2 DIAMETER AT PIPE AND SLOPE GROUT 2" TOWARD INVERT.

MANHOLE STEPS SHALL BE PLACED SO THAT OFFSET VERTICAL PORTION OF CONE IS FACING DOWNSTREAM.

NO BLOCK STRUCTURES ARE ALLOWED.

PLAN

CASTING AND ADJUSTMENT RINGS, SEE DETAIL STR-17.

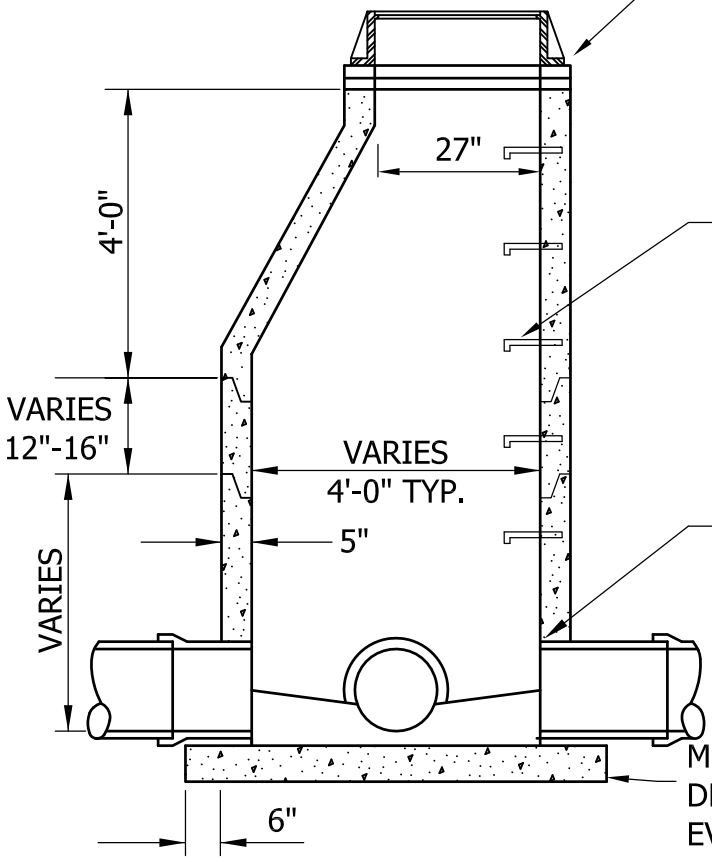


MANHOLE STEPS, NEENAH R1981J OR EQUAL, 16" ON CENTER.

ALL JOINTS IN MANHOLE TO HAVE "O" RING RUBBER GASKETS.

PIPE SHALL BE CUT OUT FLUSH WITH INSIDE FACE OF WALL.

DOGHOUSES MUST BE GROUTED BOTH INSIDE AND OUTSIDE.

MINIMUM SLAB THICHNESS IS 6" FOR 14' DEPTH. INCREASE THICKNESS 1" FOR EVERY 4' OF DEPTH GREATER THAN 14', AND REINFORCE WITH 6" X 6" 10/10 MESH.

SECTION

STORM SEWER JUNCTION MANHOLE

HUDSON, WISCONSIN

PLATE NO. STO-2

MARCH 2013

Hudson, WI

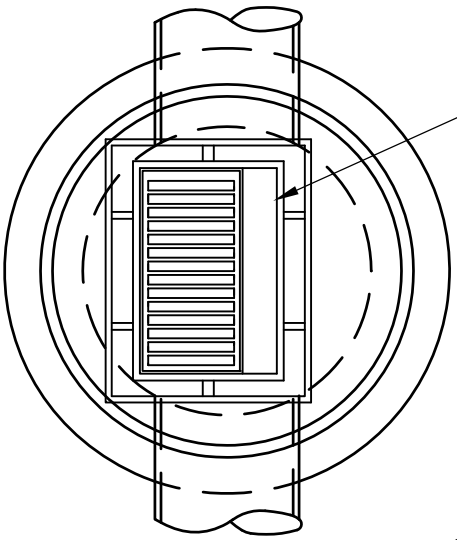

PLAN

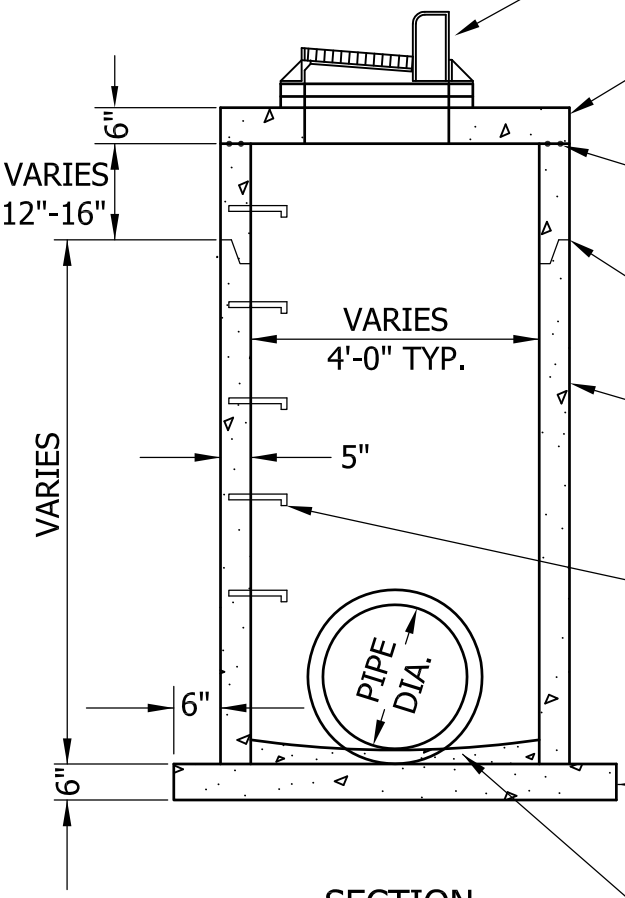


SECTION

24"X36" SLAB OPENING FOR CASTING AS SPECIFIED.

DIMENSION FROM BACK OF CURB TO CENTER OF PIPE.
4' DIA. MH - 9" IN FROM BACK OF CURB
5' DIA. MH - 3" IN FROM BACK OF CURB
6' DIA. MH - 3" BEHIND BACK OF CURB
7' DIA. MH - 9" BEHIND BACK OF CURB
8' DIA. MH - 15" BEHIND BACK OF CURB

CASTING AND ADJUSTMENT RINGS, SEE DETAIL STR-17.

6" PRECAST REINFORCED CONCRETE SLAB. FOR 6' DIA. MANHOLE, AN 8" PRECAST SLAB IS REQUIRED.

TOP OF BARREL SECTION UNDER TOP SLAB TO HAVE FLAT TOP EDGE SEALED WITH 2 BEADS OF RAMNEK OR EQUAL.

ALL JOINTS IN MANHOLE TO HAVE "O" RING RUBBER GASKETS.

PRECAST CONCRETE SECTION

DOGHOUSES SHALL BE GROUTED ON BOTH THE OUTSIDE AND INSIDE.

MANHOLE STEPS, NEENAH R1981J OR EQUAL, 16" O.C.

NO BLOCK STRUCTURES ARE ALLOWED.

MINIMUM SLAB THICKNESS, 6" FOR 14' DEPTH. INCREASE THICKNESS 1" FOR EACH 4' OF DEPTH GREATER THAN 14', AND REINFORCE WITH 6"X6" 10/10 MESH.

GROUT BOTTOM

## CATCH BASIN MANHOLE

HUDSON, WISCONSIN

PLATE NO. STO-3

MARCH 2013

Hudson, WI

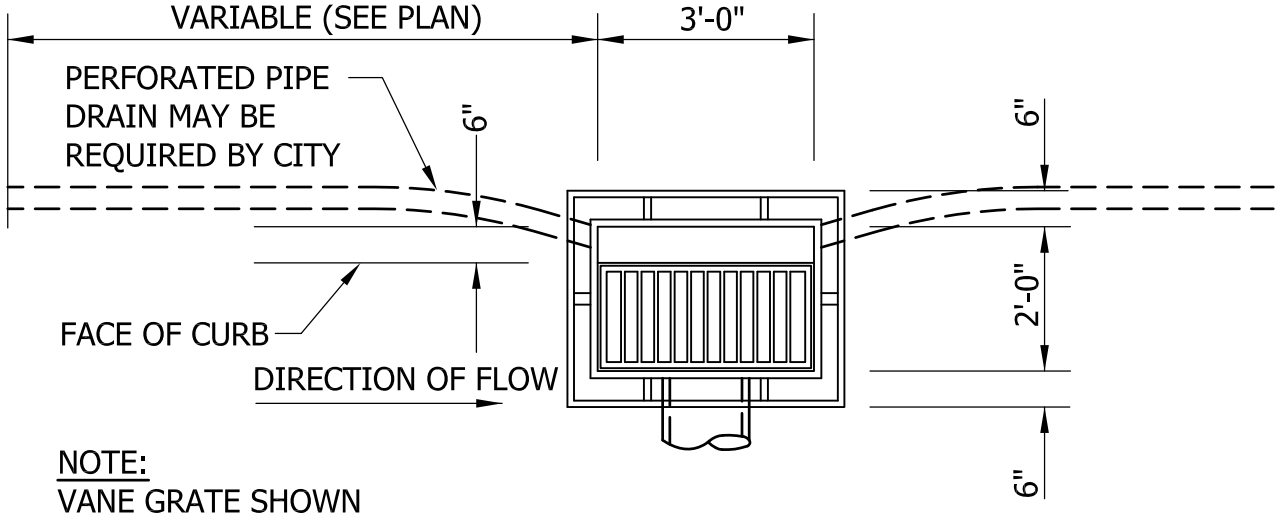


PLAN

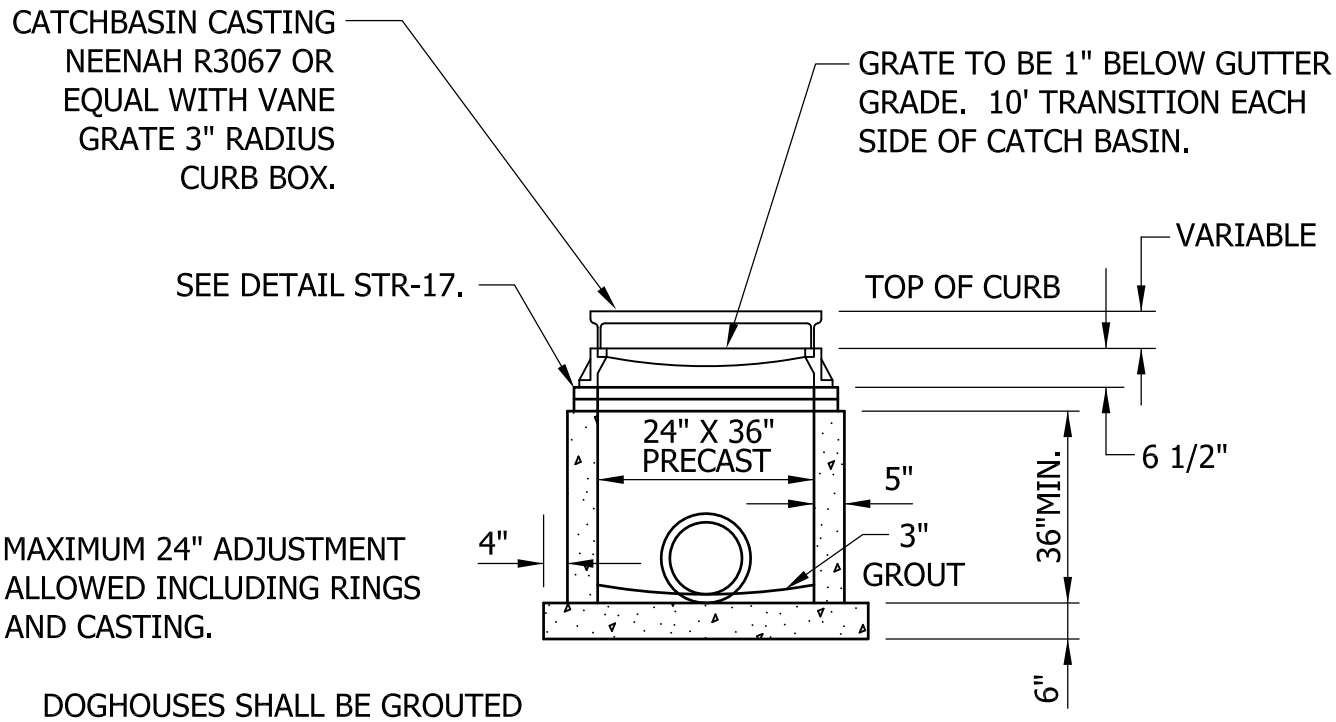


DOGHOUSES SHALL BE GROUTED ON BOTH THE OUTSIDE AND THE INSIDE.

SECTION

TYPE II CATCHBASIN

HUDSON, WISCONSIN

PLATE NO. STO-4

MARCH 2013

Hudson, WI

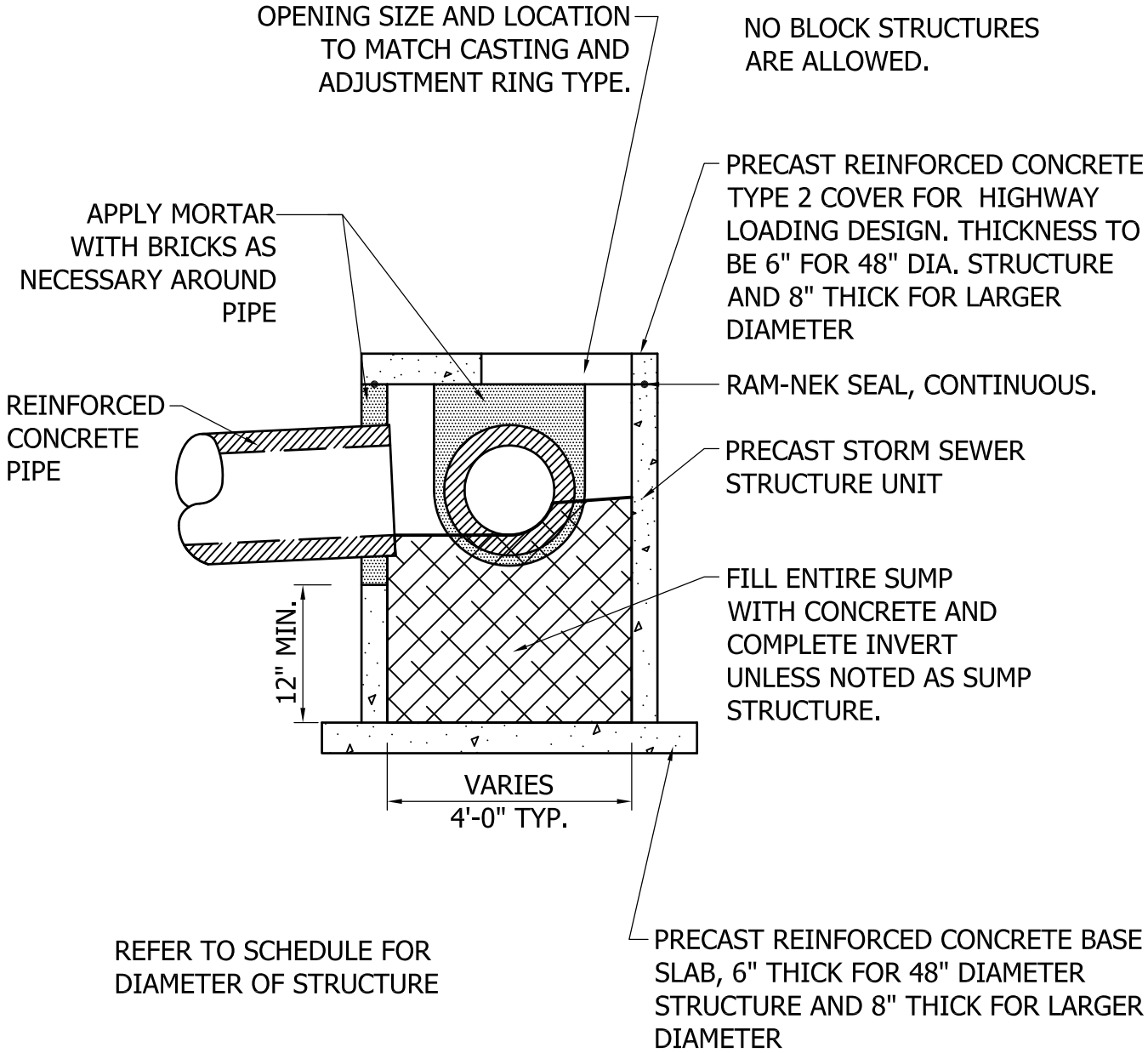


PRECAST SHALLOW STORM SEWER STRUCTURE

HUDSON, WISCONSIN

PLATE NO. STO-5

MARCH 2013

Hudson, WI

NON-SHRINKING GROUT REQUIRED

NO. 4 REBAR (TO EXTEND 10' BEYOND EACH SIDE OF CASTING) EMBEDDED IN CONC. COLLAR AND CURB.

CATCHBASIN CASTING NEENAH R-3067V OR APPROVED EQUAL. 3" RADIUS CURB BOX.

SEE DETAIL PLATE IN NEENAH BOOK

CONCRETE COLLAR TO ENCASE CASTING AND RINGS. CONCRETE CURB MIX SHALL BE USED FOR CONCRETE COLLAR.

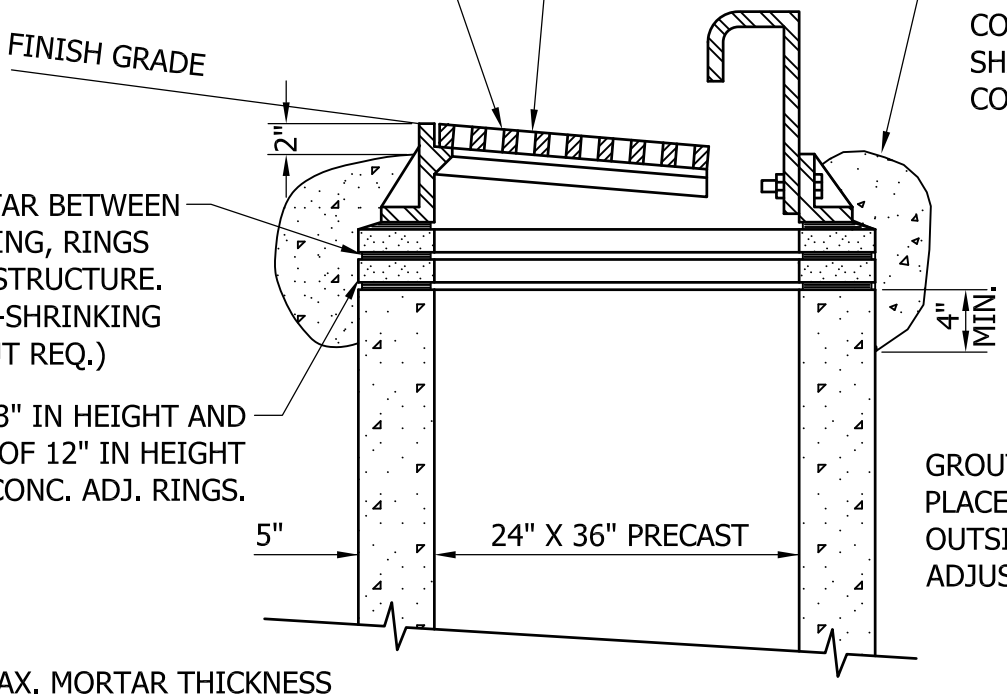


MORTAR BETWEEN CASTING, RINGS AND STRUCTURE. (NON-SHRINKING GROUT REQ.)

MIN. 3" IN HEIGHT AND MAX. OF 12" IN HEIGHT FOR CONC. ADJ. RINGS.

GROUT SHALL BE PLACED BETWEEN AND OUTSIDE OF CONC. ADJUSTMENT RINGS.

1" MAX. MORTAR THICKNESS WHEN USED FOR CASTING ADJUSTMENT.

NOTES:

THE CATCH BASIN CASTING SHALL LINE UP WITH THE CONCRETE STRUCTURE SO IT CAN BE PROPERLY MAINTAINED.

NO SHIMS TO BE USED OTHER THAN MORTAR WHEN ADJUSTING RINGS AND CASTING.

## CONCRETE ENCASED CASTING ON TYPE II CATCHBASIN

HUDSON, WISCONSIN

PLATE NO. STO-6

MARCH 2013

Hudson, WI

SEE CITY PLATE NO. STO-8 FOR RIPRAP PLACEMENT.

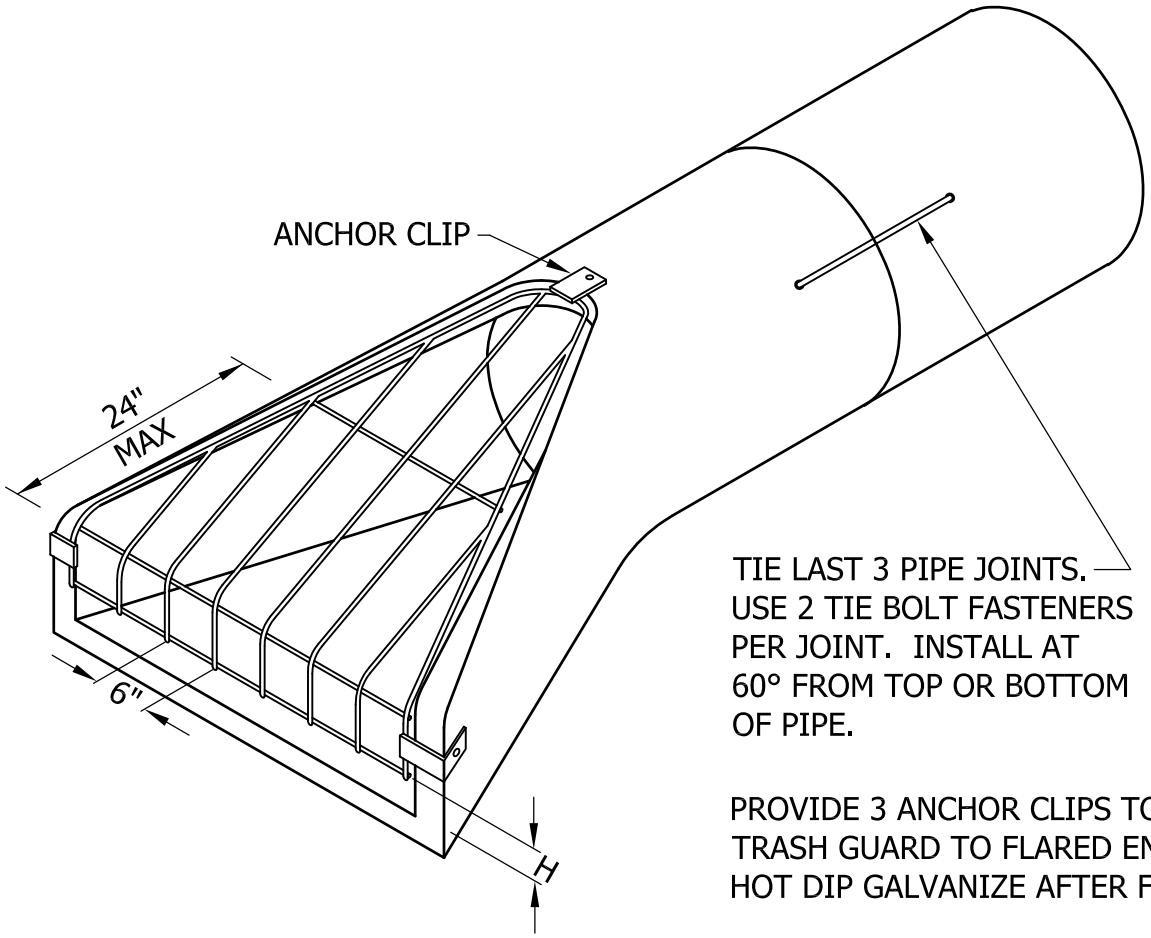


TIE LAST 3 PIPE JOINTS. USE 2 TIE BOLT FASTENERS PER JOINT. INSTALL AT 60° FROM TOP OR BOTTOM OF PIPE.

PROVIDE 3 ANCHOR CLIPS TO FASTEN TRASH GUARD TO FLARED END SECTION. HOT DIP GALVANIZE AFTER FABRICATION.

ANCHOR BOTH SIDES.

ISOMETRIC

TRASH GUARD SIZING

| PIPE SIZE | BARS | H | BOLTS |
|---|---|---|---|
| 12"-18" | 3/4"ϕ | 4" | 5/8" |
| 21"-42" | 1"ϕ | 6" | 3/4" |
| 48"-72" | 1 1/4"ϕ | 12" | 1" |

FLARED END SECTION AND TRASH GUARD

HUDSON, WISCONSIN

PLATE NO. STO-7

MARCH 2013

Hudson, WI

RIPRAP REQUIREMENTS

| | |
|---|---|
| 12" TO 18" | 8 CY RIP RAP |
| 24" | 12 CY MED. RIP RAP |
| 27" | 14 CY MED. RIP RAP |
| 30" | 17 CY MED. RIP RAP |
| 33" | 20 CY MED. RIP RAP |

RIPRAP REQUIREMENTS

| | |
|---|---|
| 36" | 23 CY MED. RIP RAP |
| 42" | 31 CY MED. RIP RAP |
| 48" | 38 CY MED. RIP RAP |
| 54" AND UP | 62 CY AND UP HEAVY RIP RAP |

(ONE CUBIC YARD IS APPROXIMATELY 2,800 LBS.)

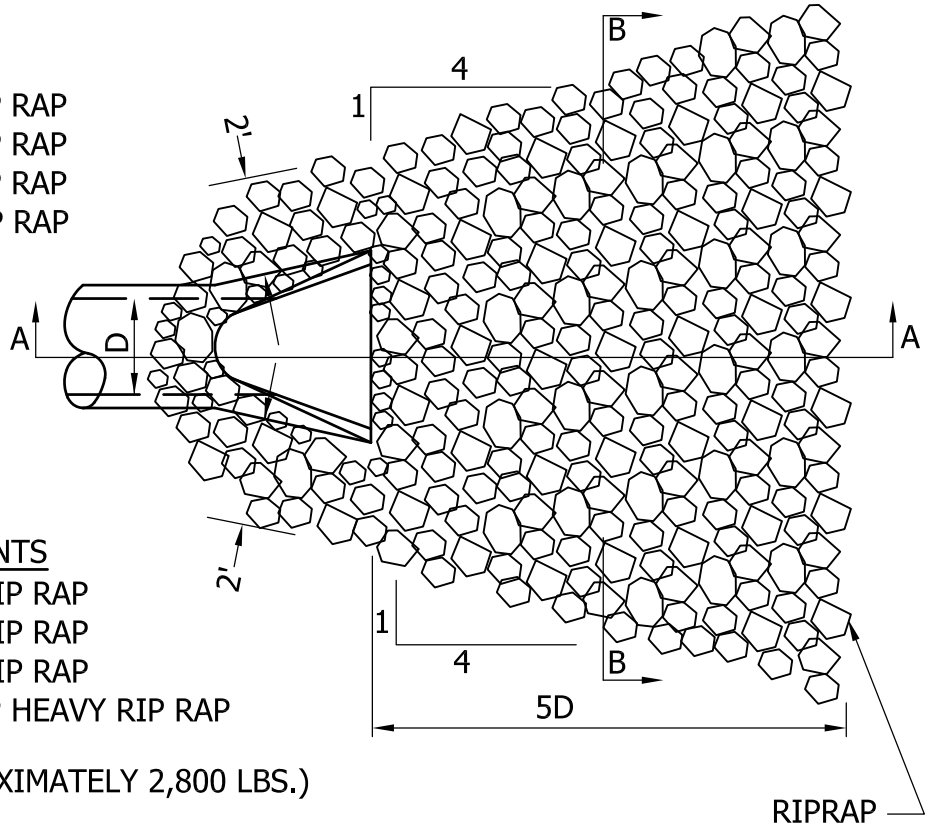


PLAN

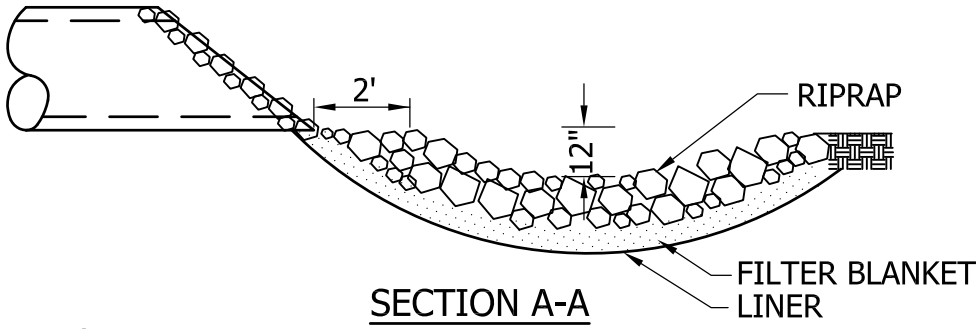


SECTION A-A

NOTE:
FILTER BLANKET REQUIRED UNDER RIPRAP OR 2 LAYERS OF 500X MIRAFI FABRIC OR EQUAL

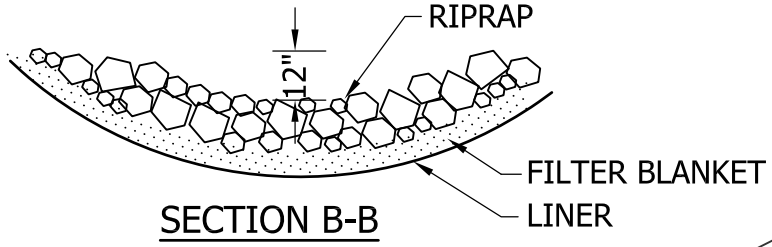


SECTION B-B

RIPRAP AT OUTLETS

HUDSON, WISCONSIN

PLATE NO. STO-8

MARCH 2013

Hudson, WI

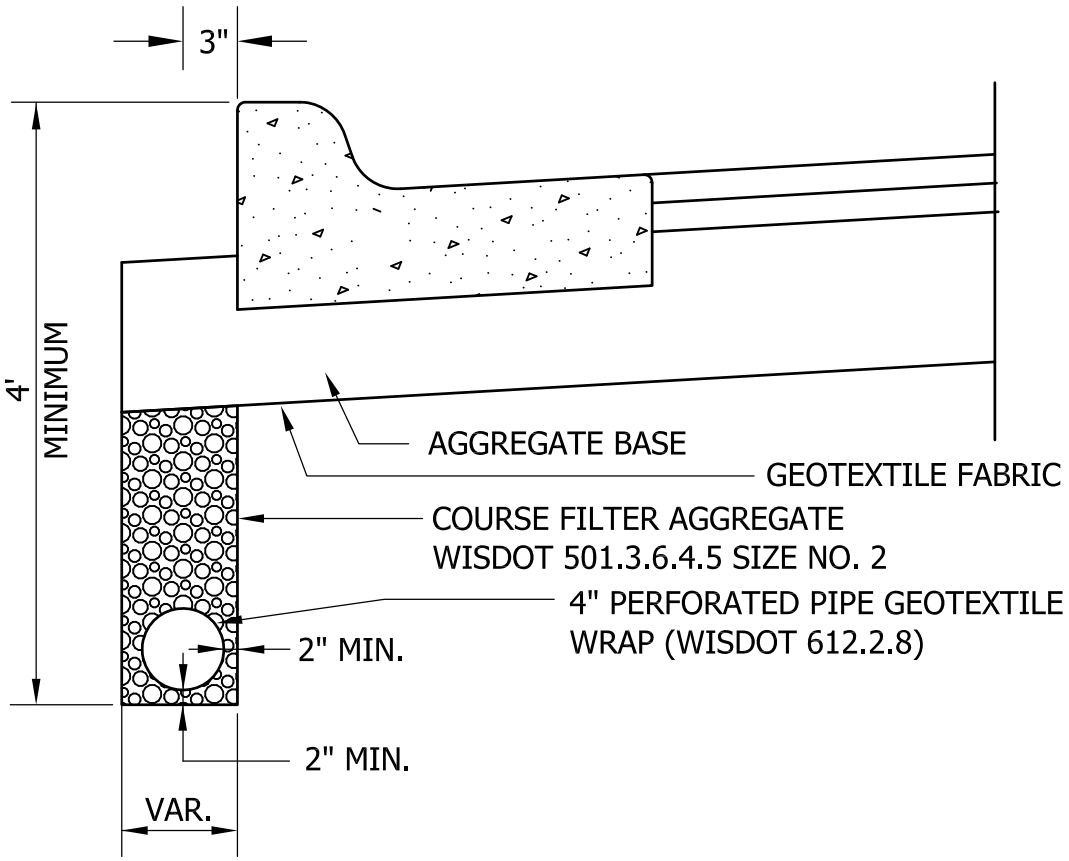


TRENCH DETAIL

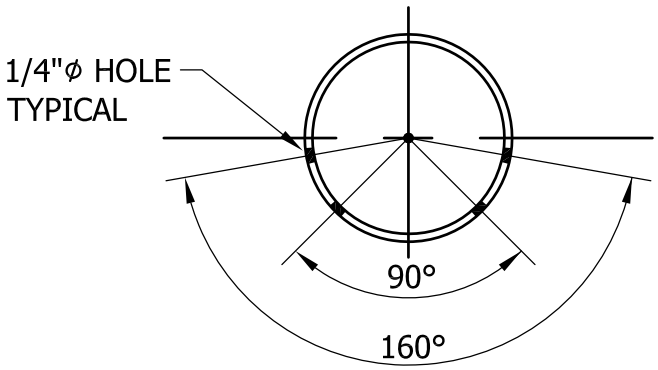


PIPE DETAIL

PVC PERFORATED PIPE BELOW CONCRETE CURB

HUDSON, WISCONSIN

PLATE NO. STO-9

MARCH 2013

Hudson, WI

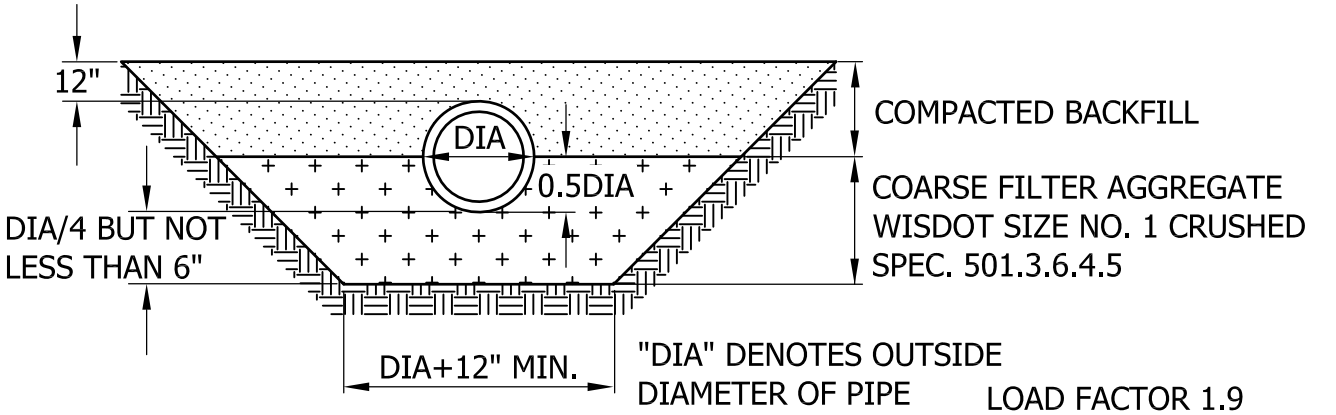


LOAD FACTOR 1.9

CLASS B

HAND SHAPED FROM
ANGULAR BEDDING MATERIAL

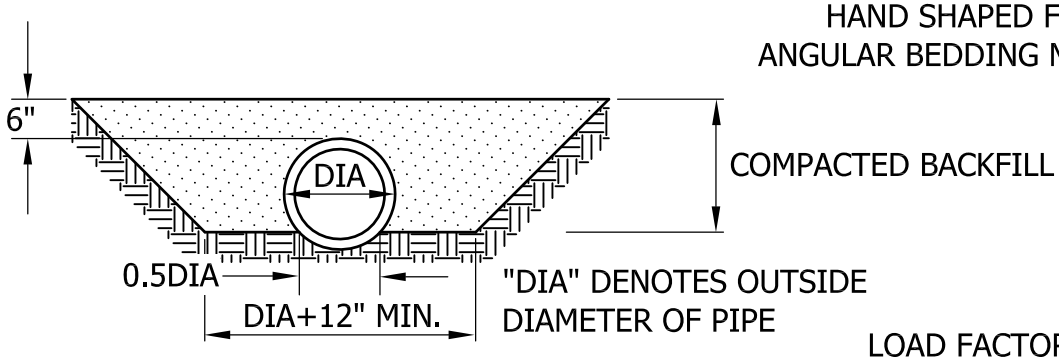


LOAD FACTOR 1.5

CLASS C-1

HAND SHAPED FROM FIRM
UNDISTURBED SOIL

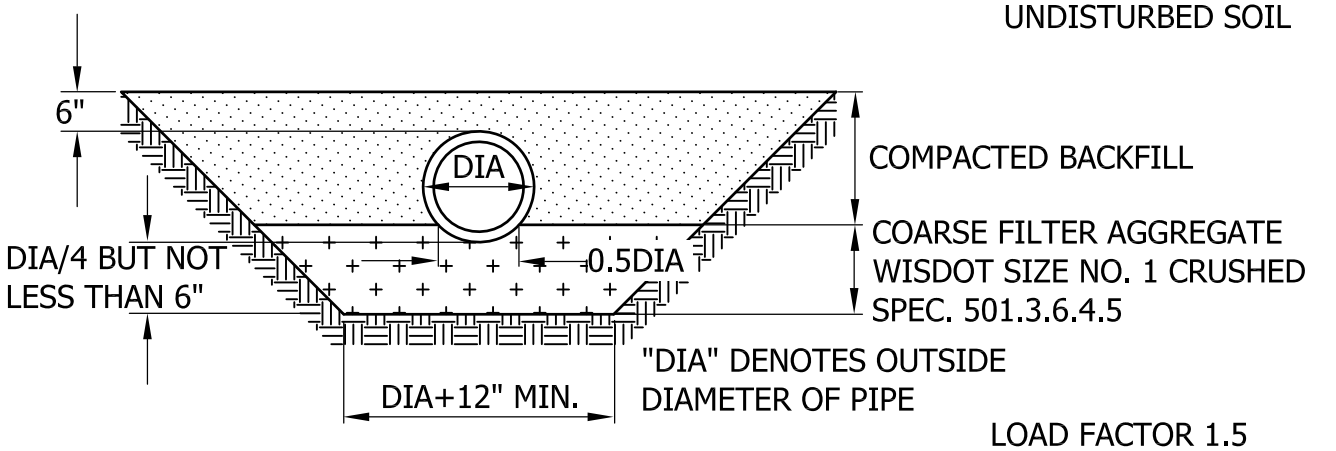


LOAD FACTOR 1.5

CLASS C-2

HAND SHAPED FROM
ANGULAR BEDDING MATERIAL

BEDDING METHODS FOR RCP, VCP AND DIP

HUDSON, WISCONSIN

PLATE NO. BED-1

MARCH 2013

Hudson, WI

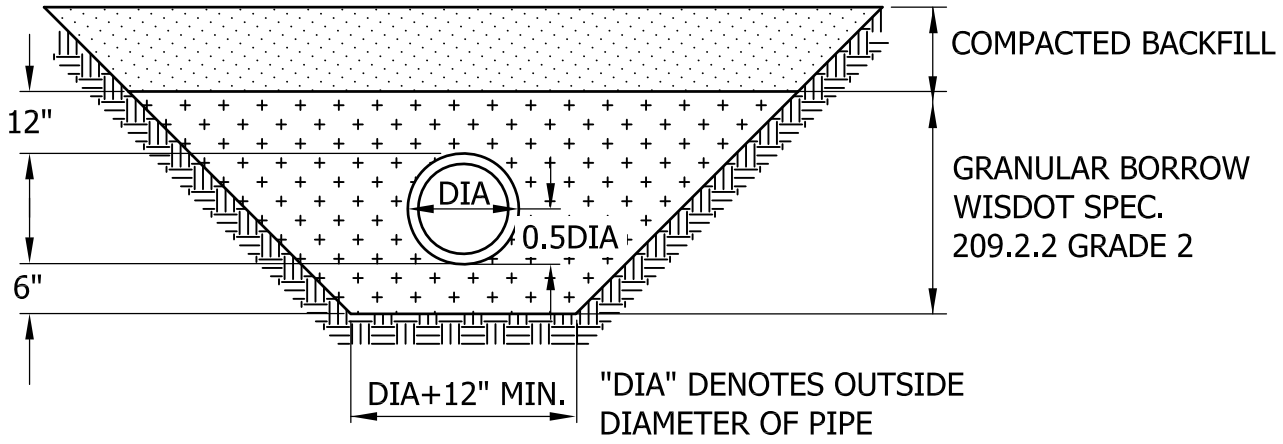


PIPE FOUNDATION & BEDDING IN GOOD SOILS

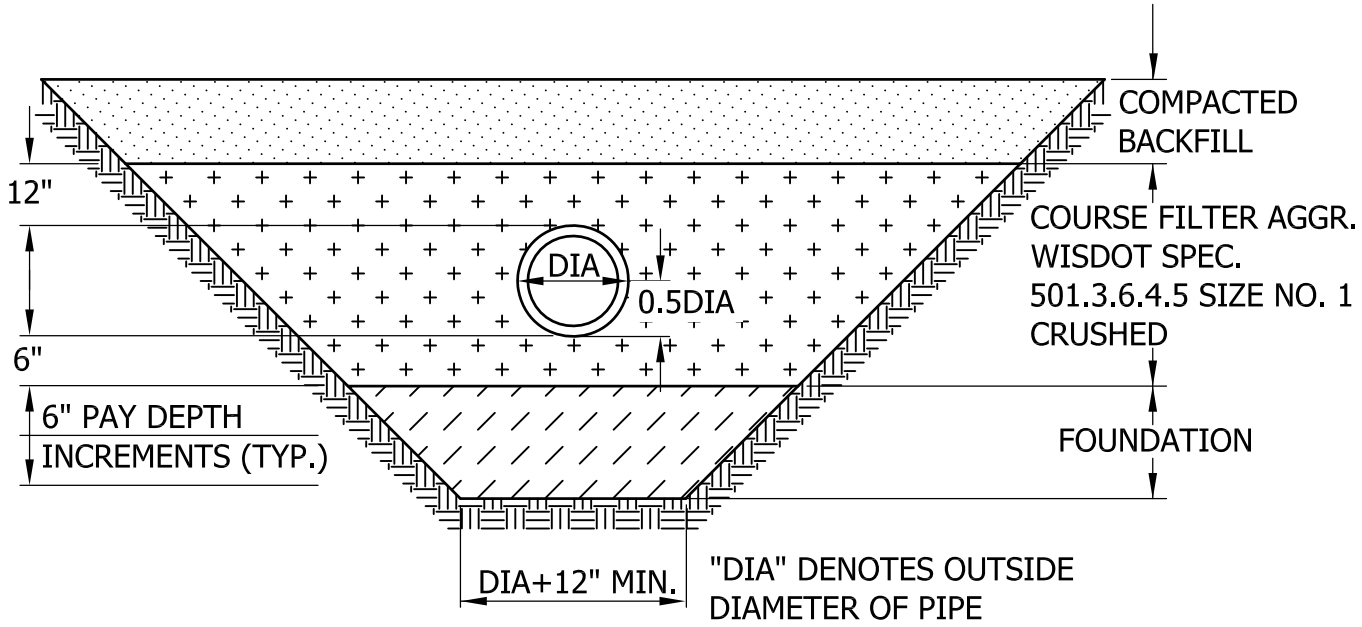


PIPE FOUNDATION & BEDDING IN POOR SOILS

BEDDING METHODS FOR PVC

HUDSON, WISCONSIN

PLATE NO. BED-2

MARCH 2013

Hudson, WI

NOTE: SERVICE CONNECTIONS TO BE AT 2:00 OR 10:00

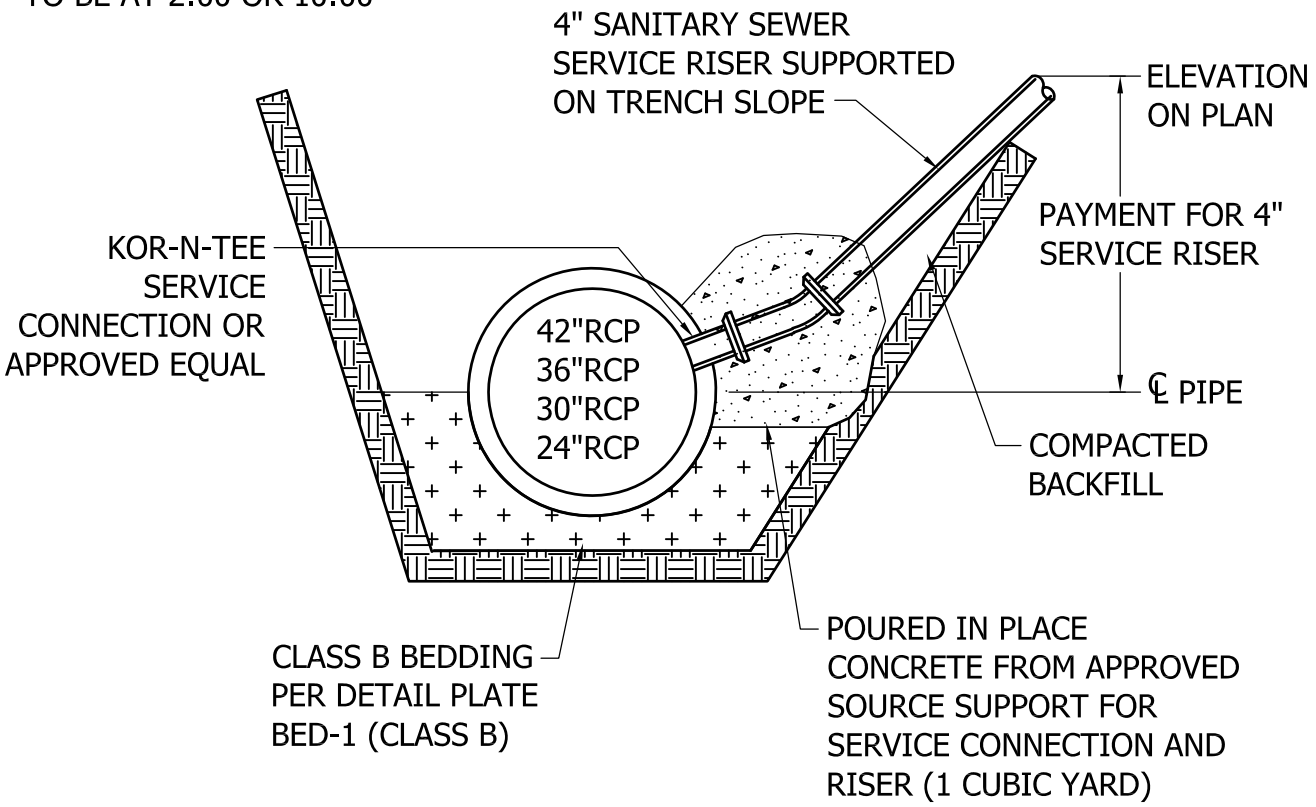


NOTE: INSTALL ALL CITY OF HUDSON SERVICES AT 10 & 2 O'CLOCK POSITIONS

SERVICE CONNECTION TO RCP

HUDSON, WISCONSIN

PLATE NO. SER-1

MARCH 2013

Hudson, WI

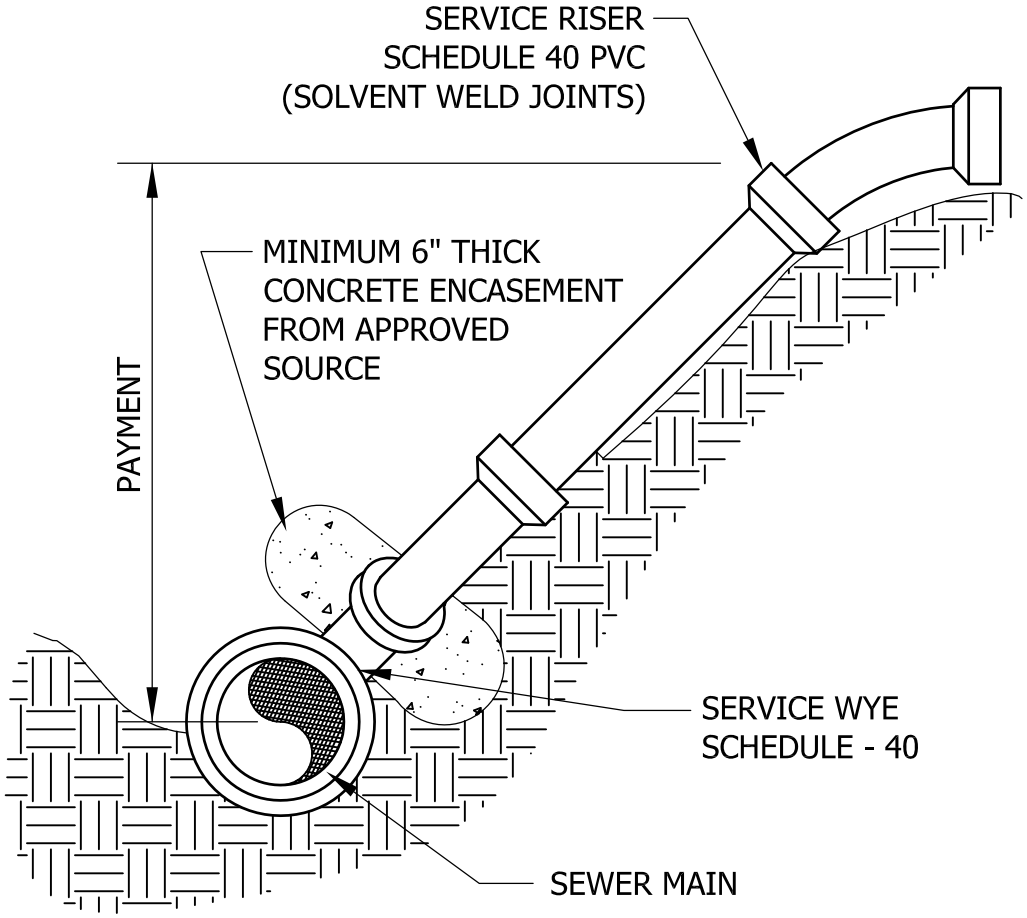


NOTE: INSTALL ALL CITY OF HUDSON SERVICES AT 10 & 2 O'CLOCK POSITIONS

SERVICE RISER

HUDSON, WISCONSIN

PLATE NO. SER-2

MARCH 2013

Hudson, WI

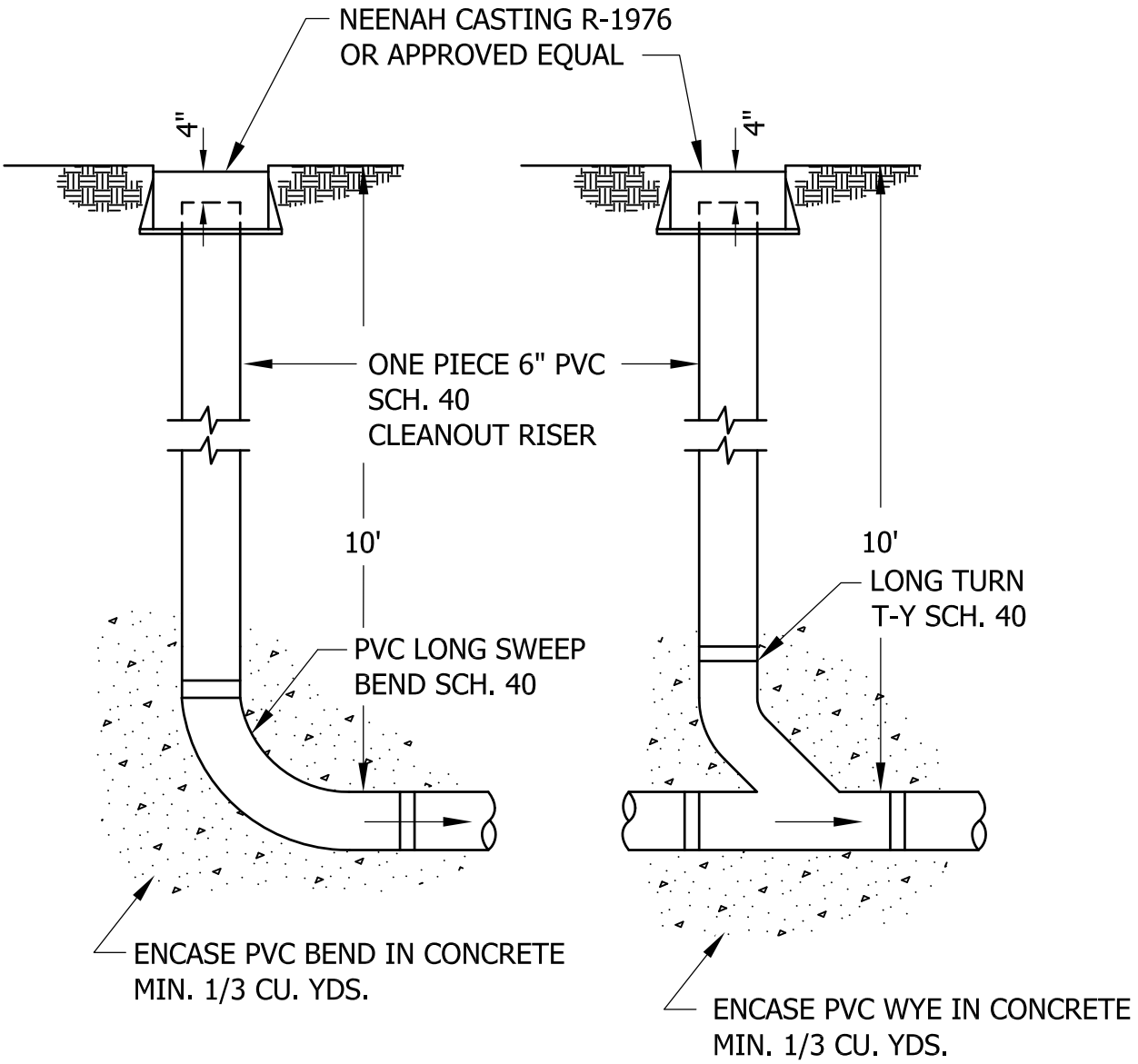


END OF LINE CLEANOUT

IN LINE CLEANOUT

NOTES:

1. UTILIZE NEENAH R-1976 CASTING, OR APPROVED EQUAL, SET 1/2" LOWER THAN ADJACENT FINISHED GRADE.
2. TERMINATE PVC 4" BELOW TOP OF CASTING.
3. ENCLOSE LONG SWEEP BEND OR COMBINATION WYE IN CONCRETE AS SHOWN.
4. INSTALL RISER ACCORDING TO APPLICABLE PLUMBING CODE.

## SERVICE LINE CLEANOUTS

HUDSON, WISCONSIN

PLATE NO. SER-3

MARCH 2013

Hudson, WI

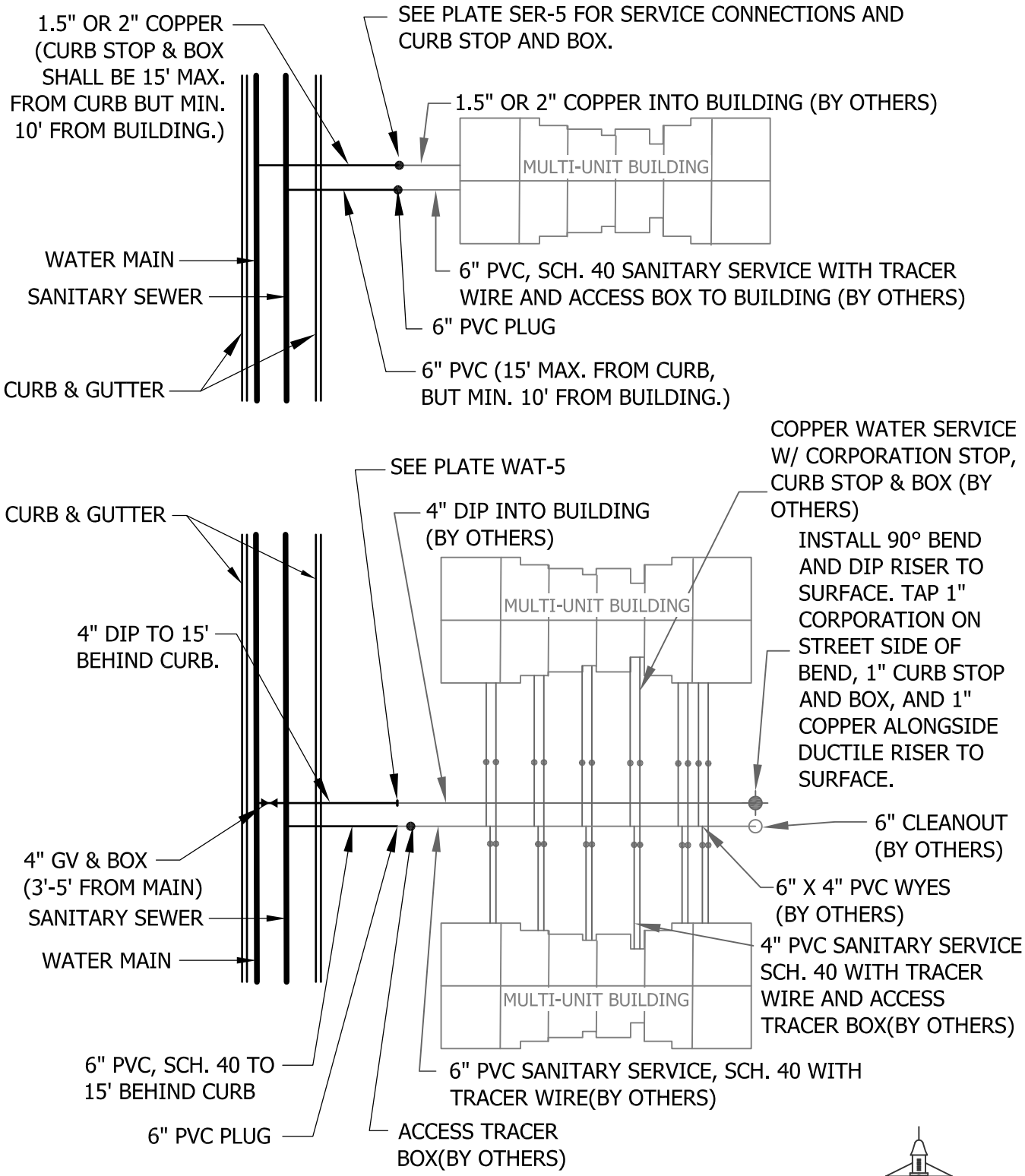


# MULTI FAMILY SEWER AND WATER SERVICE

HUDSON, WISCONSIN

PLATE NO. SER-4

MARCH 2013

Hudson, WI

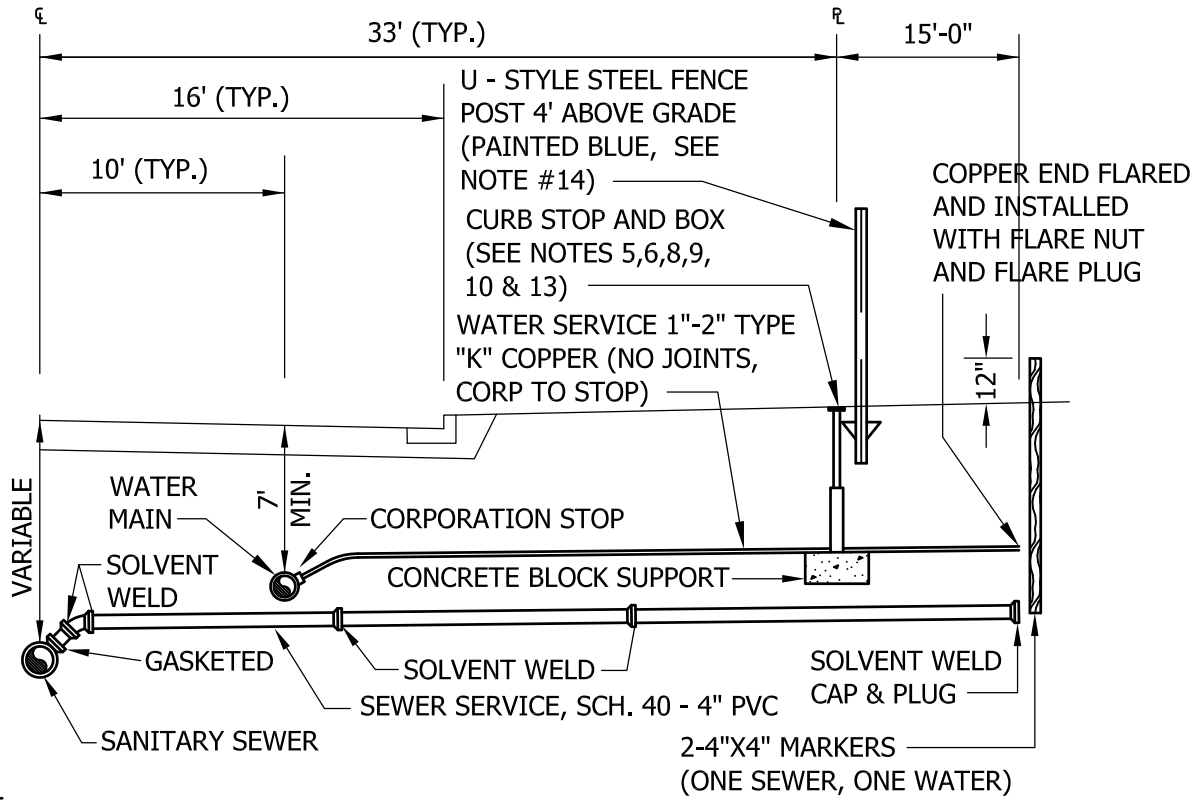


NOTES:

1. SEWER SERVICES, SCHEDULE 40 - 4" AND 6" PVC.
2. SLOPE - 1/4" PER FOOT MINIMUM (REFERENCE TO PROPOSED HOUSE PAD ASSURING GRAVITY FLOW TO PROPOSED BUILDING OR HOUSE) CONTRACTOR TO SUPPLY EXACT END OF SERVICE ELEVATION & LOCATION.
3. PIPE JOINTS AND FITTINGS AFTER WYE BRANCH SHALL BE NON GASKETED, SOLVENT WELD TYPE.
4. ALL PIPE SHALL BE BEDDED IN GRANULAR BORROW 209.2.2 GRADE 1 OR COURSE FILTER AGGREGATE (501.3.6.4.5 SIZE NO. 1 CRUSHED)
5. CURB BOX SHALL EXTEND FROM 78" TO 90" AND INSTALLED TO BE ADJUSTABLE 6" UP AND DOWN FROM FINISHED GRADE.
6. ADJUST CURB BOX TO 1" BELOW FINISH GRADE.
7. 1-1/2" AND 2" TAPS (AND ANY SIZE TAPS IN 4" D.I.P.) SHALL BE INSTALLED WITH DOUBLE STRAP TAPPING SERVICE SADDLE, FORD STYLE F202 (WITH AWWA CC THREADS) OR APPROVED EQUAL.
8. ALL CURB STOPS AND CORPORATION STOPS SHALL BE IN THE **OPEN** POSITION DURING THE PRESSURE TEST.
9. CORPORATION STOP (AWWA CC THREADS): MUELLER 300 BALL B25000, B25028 OR APPROVED EQUAL.
   CURB STOP: MUELLER 300 BALL B25154, B25155 OR APPROVED EQUAL.
   CURB BOX (MINNEAPOLIS PATTERN): 1" SERVICE - MUELLER H10300 (1-1/4" UPPER SECTION) OR APPROVED EQUAL.
   1-1/2" & 2" SERVICES: MUELLER H10302 (1-1/2" UPPER SECTION) OR APPROVED EQUAL.
10. CURB BOXES IN BITUMINOUS OR CONCRETE SHALL BE INSTALLED UTILIZING VALVCO CASTING SC40(WITH WATER LID), OR APPROVED EQUAL.
11. SERVICE FITTING COUPLINGS UTILIZED FROM CURB STOP TO BUILDING SHALL BE MUELLER H-15400, H-15430, OR APPROVED EQUAL.
12. WATER SERVICE SHALL BE TAPPED WITH WATER MAIN UNDER PRESURE, AND LOCATED IN UPPER QUADRANT OF MAIN (2:00 O'CLOCK OR 10:00 O'CLOCK), OR LOCATION APPROVED BY THE CITY ENGINEER. THREADS SHALL BE DOUBLE WRAPPED WITH TEFLON TAPE PRIOR TO INSTALLATION. TAPPING BIT SHALL BE INSPECTED AND APPROVED BY THE CITY ENGINEER.
13. CURB BOX SHALL BE LOCATED AT PROPERTY LINE. FOR PRIVATE STREET/DRIVES, CURB BOX LOCATION SHALL BE A MAXIMUM OF 15' BEHIND CURB OR EDGE OF PAVEMENT, AND NO CLOSER THAN 10' FROM EDGE OF BUILDING. NO CURB BOX SHALL BE LOCATED IN CURB AND GUTTER OR CLOSER THAN 12" TO LIP OF GUTTER.
14. CURB BOXES LOCATED IN UNIMPROVED RIGHT-OF-WAYS AND EASEMENTS SHALL BE MARKED WITH U-STYLE STEEL POST 4' ABOVE GRADE WITH BLUE METAL SIGN LABELED "CS" IN WHITE LETTERS PER DETAIL WAT-11.

# SEWER AND WATER SERVICE CONNECTIONS

HUDSON, WISCONSIN

PLATE NO. SER-5

MARCH 2013

Hudson, WI

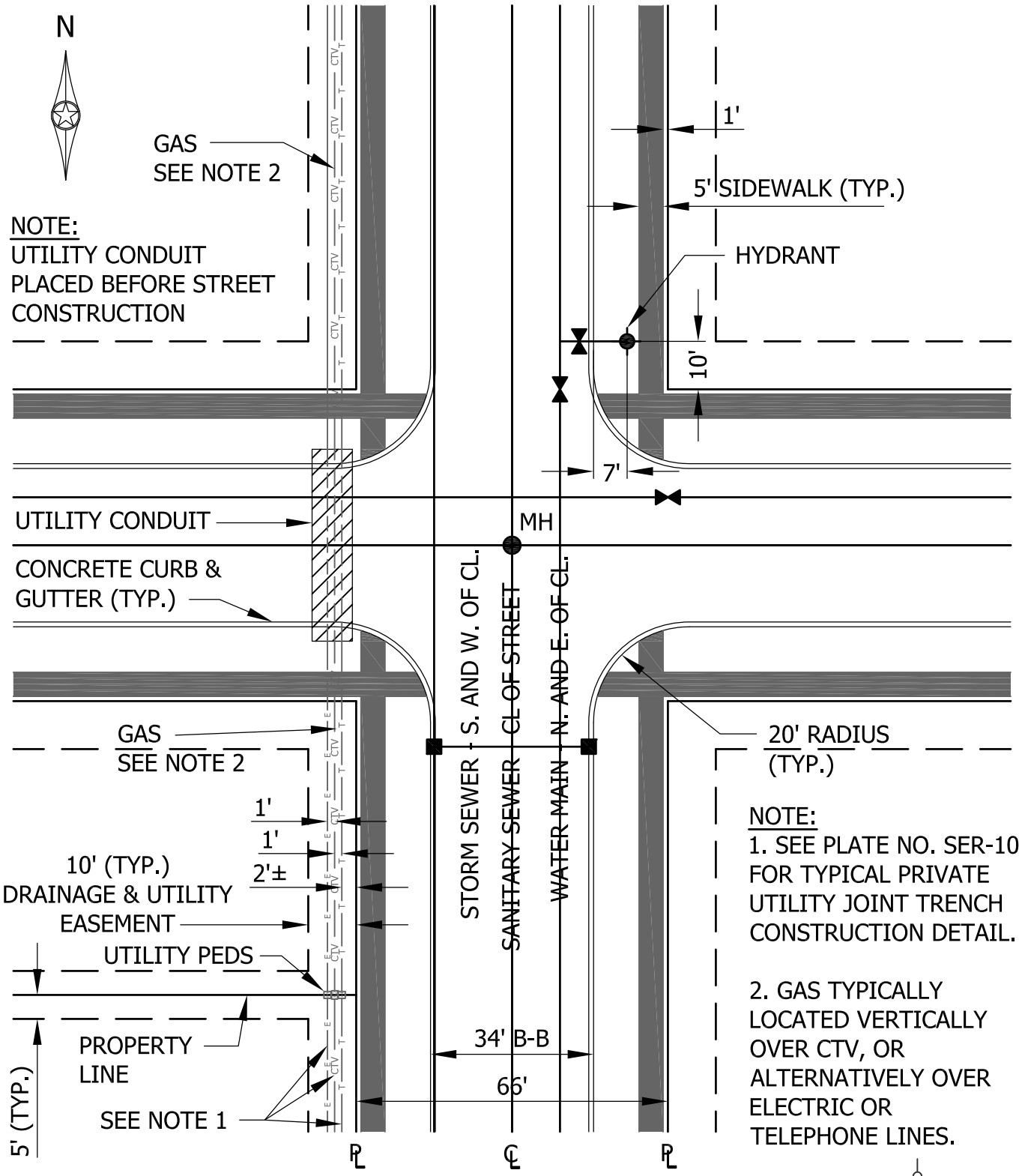


NOTE:
1. SEE PLATE NO. SER-10 FOR TYPICAL PRIVATE UTILITY JOINT TRENCH CONSTRUCTION DETAIL.

2. GAS TYPICALLY LOCATED VERTICALLY OVER CTV, OR ALTERNATIVELY OVER ELECTRIC OR TELEPHONE LINES.

# TYPICAL UTILITY LOCATIONS

HUDSON, WISCONSIN

PLATE NO. SER-9

MARCH 2013

Hudson, WI

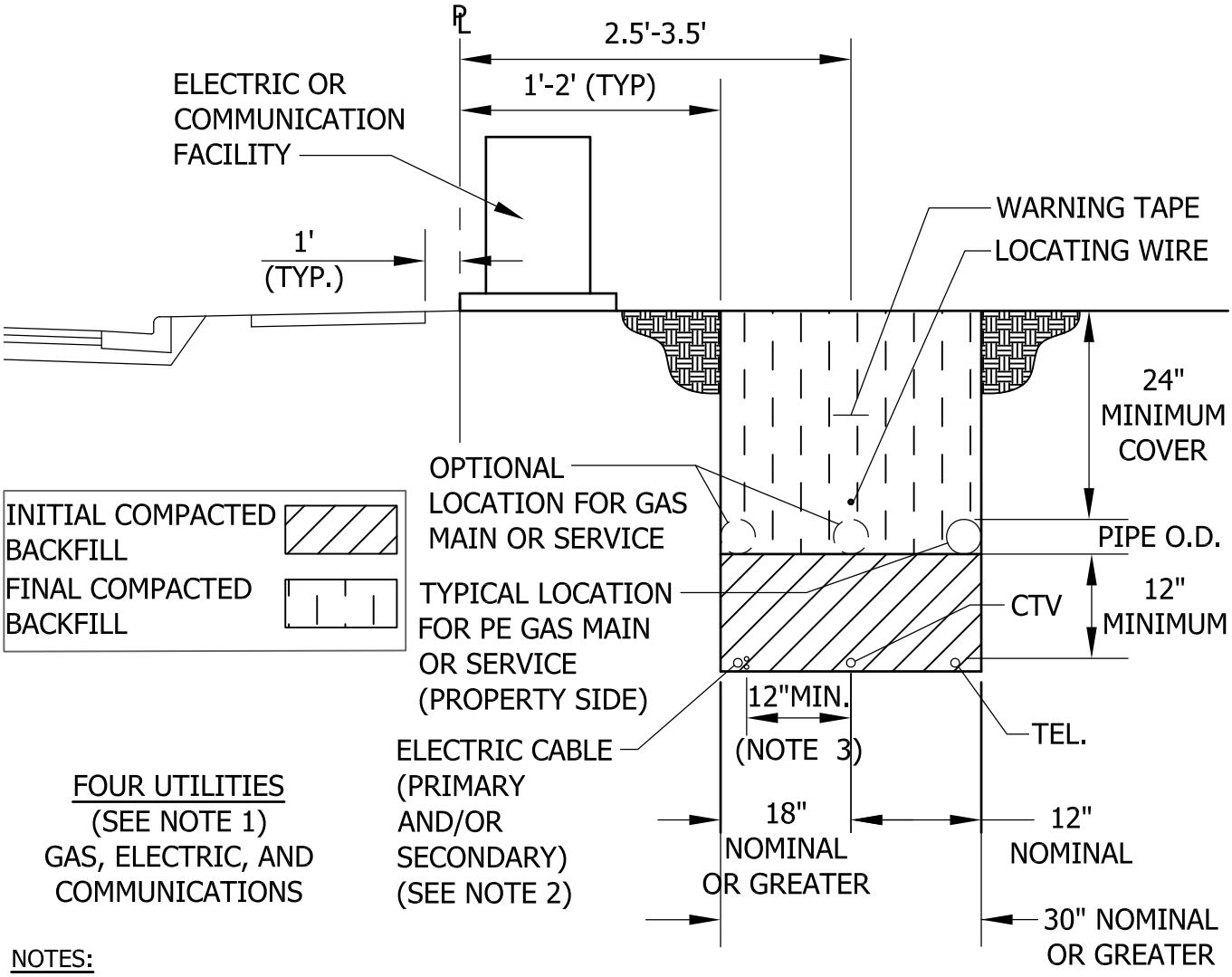


NOTES:

1. COMMUNICATION CABLES MAY BE BURIED WITH RANDOM SEPARATION PROVIDED ALL PARTIES ARE IN AGREEMENT.
2. ELECTRIC CABLES MAY BE BURIED WITH RANDOM SEPARATION PROVIDED ALL PARTIES INVOLVED ARE IN AGREEMENT, HOWEVER, 3 PHASE AND 1 PHASE CABLES SHOULD BE SEPARATED (1" OR MORE APART) PREFERABLY ON OPPOSITE SIDES OF TRENCH.
3. HORIZONTAL OR VERTICAL SEPARATION BETWEEN ELECTRIC CABLES AND COMMUNICATION CABLES SHOULD BE 12" MINIMUM.
4. VERTICAL CLEARANCE BETWEEN GAS PIPE AND CABLES SHOULD BE 12" MINIMUM.
5. HORIZONTAL SEPARATION BETWEEN GAS PIPES AND CABLES AT THE SAME LEVEL SHOULD BE A MINIMUM 12" TO 24".
6. WARNING TAPE IF USED SHALL BE INSTALLED USING METHODS AGREED UPON BY EACH OF THE UTILITY COMPANIES INVOLVED.
7. LOCATING WIRE SHALL BE INSTALLED WITH GAS PIPE USING STANDARD INSTALLATION METHODS.
8. DETAIL DERIVED FROM XCEL ENERGY'S GAS STANDARDS MANUAL, FIGURE 7.12.1-JOINT TRENCH CONSTRUCTION, DATED 10-01-02. REFER TO FIGURE 7.12.1 FOR JOINT TRENCH CONSTRUCTION WHEN LESS THAN FOUR UTILITIES INVOLVED.

# TYPICAL UTILITIES JOINT TRENCH CONSTRUCTION

HUDSON, WISCONSIN

PLATE NO. SER-10

MARCH 2013

Hudson, WI

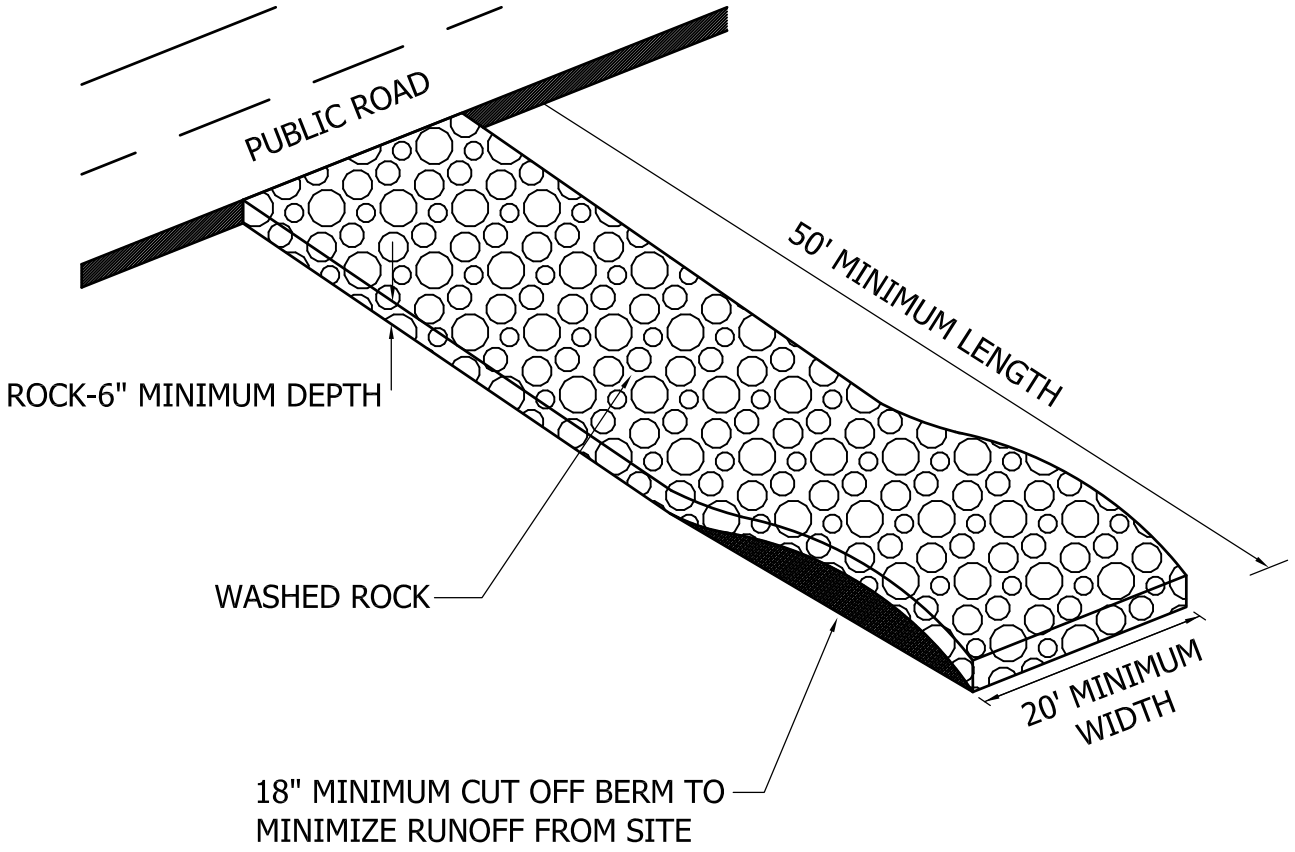


NOTES:

1. FILTER FABRIC SHALL BE PLACED UNDER ROCK TO STOP MUD MIGRATION THROUGH ROCK.
2. ENTRANCE MUST BE MAINTAINED REGULARLY TO PREVENT SEDIMENTATION ON PUBLIC ROADWAYS. FUGITIVE ROCK WILL BE REMOVED FROM ADJACENT ROADWAYS DAILY OR MORE FREQUENTLY AS NECESSARY.

ROCK CONSTRUCTION ENTRANCE

HUDSON, WISCONSIN

PLATE NO. ERO-1

MARCH 2013

Hudson, WI

STANDARD INSTALATION
REGULAR FLOW

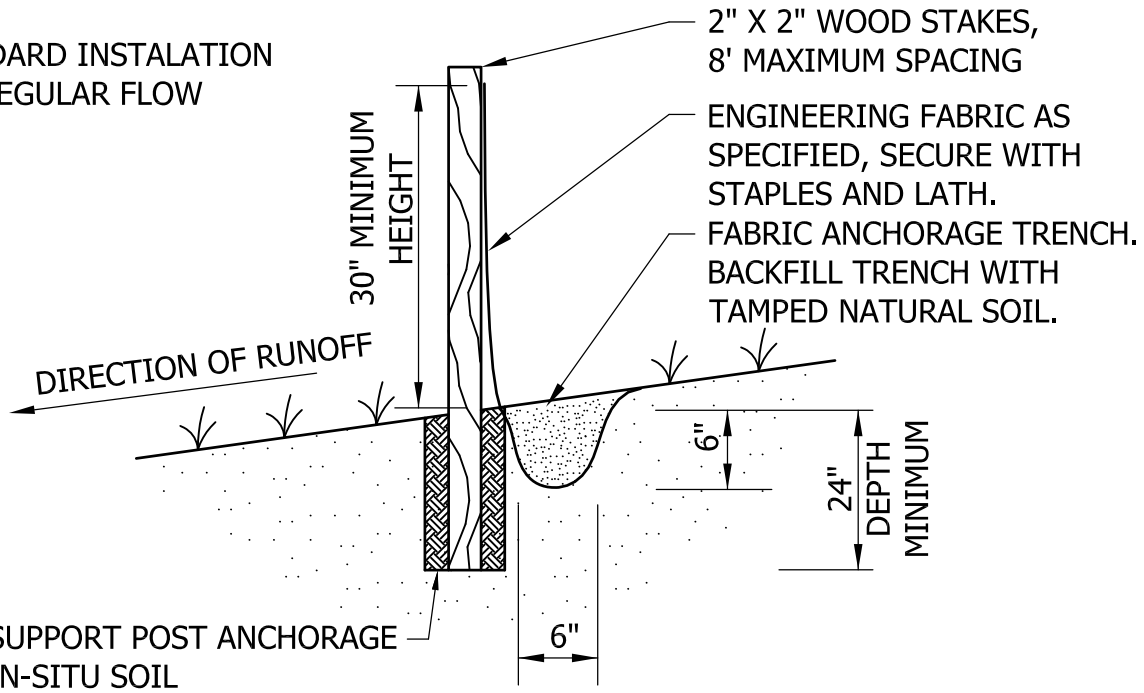


HEAVY DUTY HIGH
FLOW AREAS

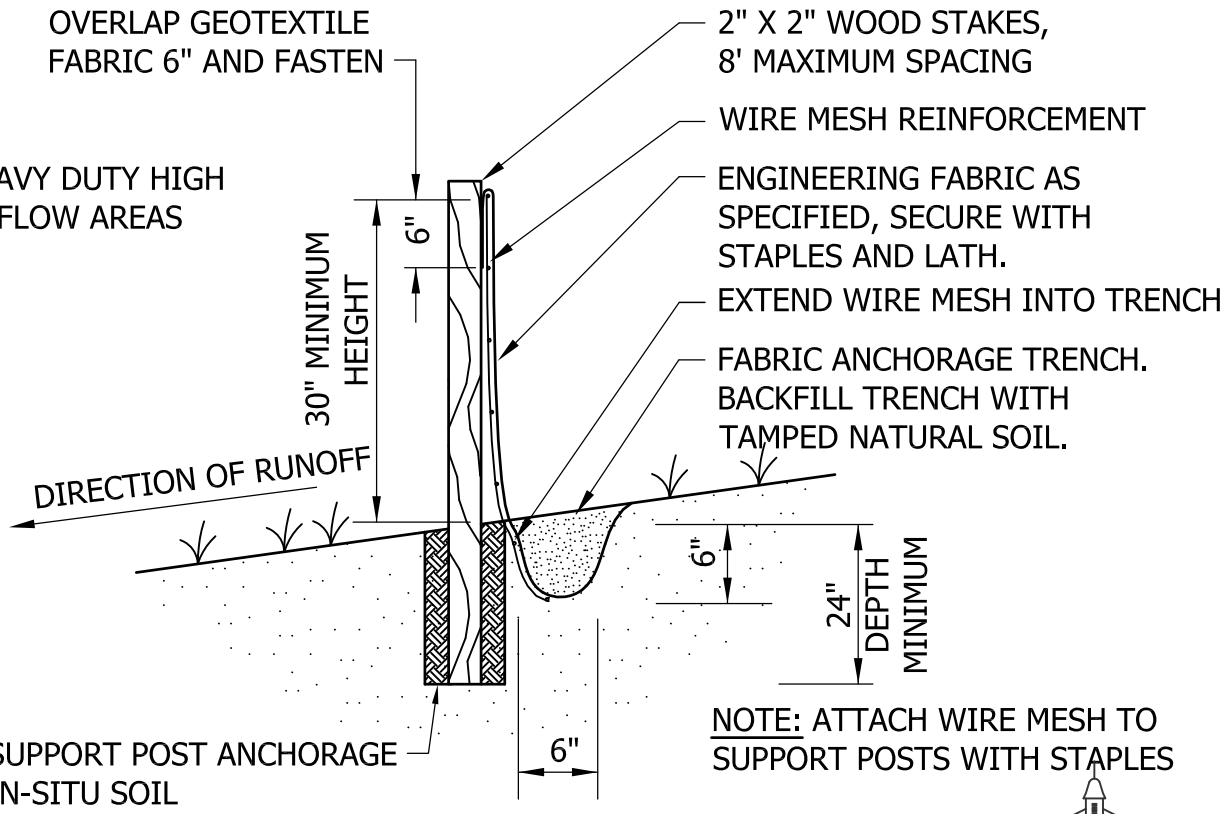


NOTE: ATTACH WIRE MESH TO
SUPPORT POSTS WITH STAPLES

# SILTATION FENCE

HUDSON, WISCONSIN

PLATE NO. ERO-2

MARCH 2013

Hudson, WI

WOODEN LATH SHALL BE NAILED SECURELY TO THE POST MEMBER TO SECURE FILTER FABRIC.

2" X 4" HORIZONTAL MEMBERS CONTINUOUS AROUND TOP AND BOTTOM. FASTENED TO EACH POST USING 2-20D COMMON NAILS

2" X 4" X 2.5' LONG WOOD POSTS, 8 REQ'D.

MONOFILAMENT GEOTEXTILE FABRIC (MACHINE SLICED). ADDITIONAL 8-10" OF FABRIC FLAP AT BOTTOM OF BOX

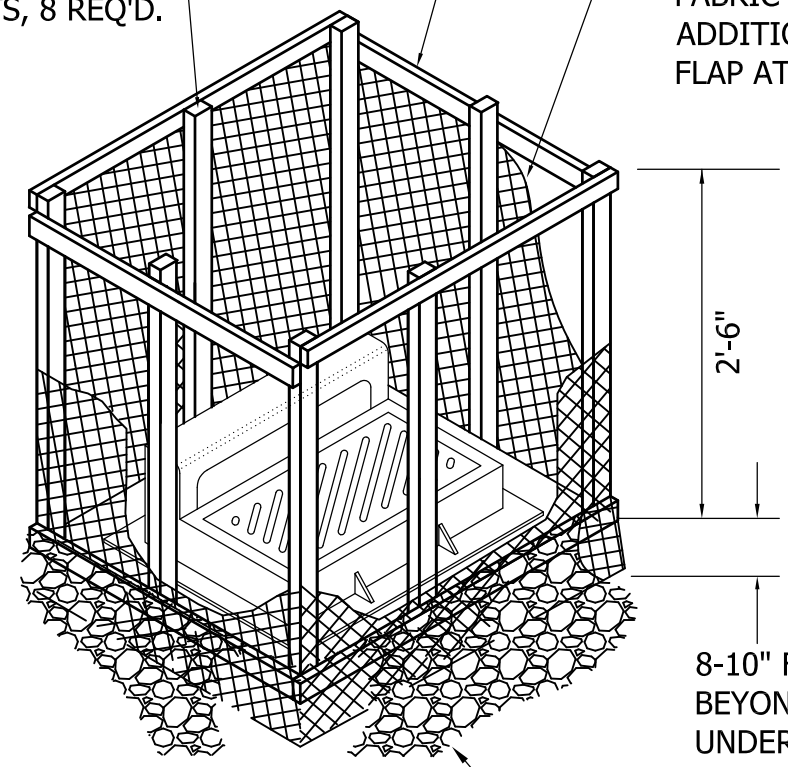


8-10" FABRIC FLAP EXTENDING BEYOND BOTTOM 2"x4" - BURY UNDER ROCK TO PREVENT UNDERWASHING

1 1/2" WASHED ROCK
1' DEEP X 1' WIDE

NOTES:

CONTRACTOR SHALL CONSTRUCT SILT BOX TO FIT AROUND THE INLET STRUCTURE WITH 6" MINIMUM CLEARANCE TO EDGES OF STRUCTURE. SILT BOX TO BE PLACED ON AN EVEN SURFACE 6" BELOW STRUCTURE OPENING. TOP OF SILT BOX TO EXTEND 18" MINIMUM ABOVE EXISTING GRADE.

## INLET PROTECTION FOR CATCH BASIN

HUDSON, WISCONSIN

PLATE NO. ERO-3

MARCH 2013

Hudson, WI

WOODEN LATH SHALL BE NAILED SECURELY TO THE POST MEMBER TO SECURE FILTER FABRIC.

2" X 4" HORIZONTAL MEMBERS CONTINUOUS AROUND TOP AND BOTTOM. FASTENED TO EACH POST USING 2-20D COMMON NAILS

2" X 4" X 2.5' LONG WOOD POSTS, 8 REQ'D.

MONOFILAMENT GEOTEXTILE FABRIC (MACHINE SLICED). ADDITIONAL 8-10" OF FABRIC FLAP AT BOTTOM OF BOX

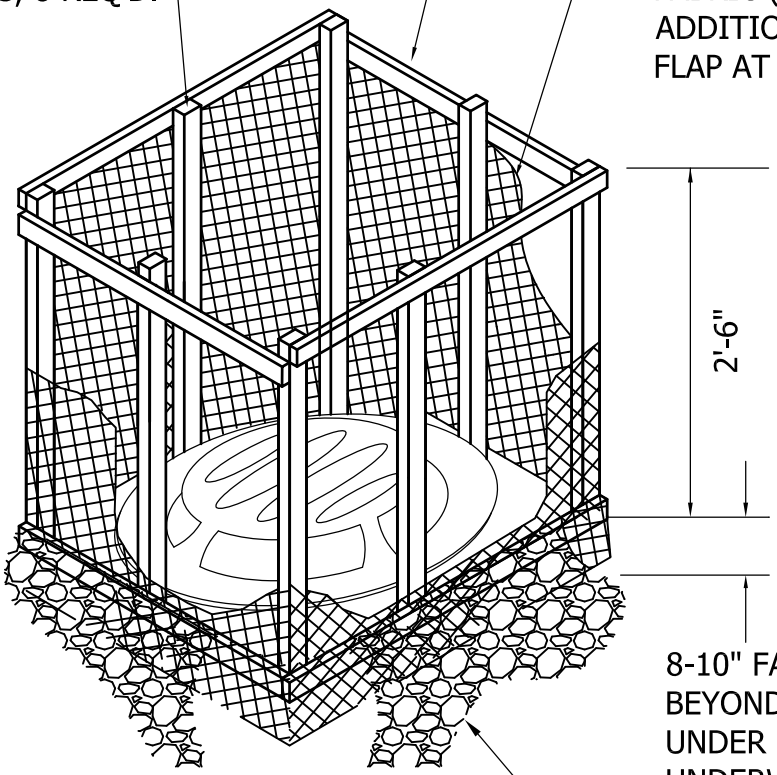


8-10" FABRIC FLAP EXTENDING BEYOND BOTTOM 2"X4" - BURY UNDER ROCK TO PREVENT UNDERWASHING

1 1/2" WASHED ROCK
1' DEEP X 1' WIDE

NOTES:

CONTRACTOR SHALL CONSTRUCT SILT BOX TO FIT AROUND THE INLET STRUCTURE WITH 6" MINIMUM CLEARANCE TO EDGES OF STRUCTURE. SILT BOX TO BE PLACED ON AN EVEN SURFACE 6" BELOW STRUCTURE OPENING. TOP OF SILT BOX TO EXTEND 18" MINIMUM ABOVE EXISTING GRADE.

## INLET PROTECTION FOR BEEHIVE CATCH BASIN

HUDSON, WISCONSIN

PLATE NO. ERO-4

MARCH 2013

Hudson, WI

PLAN

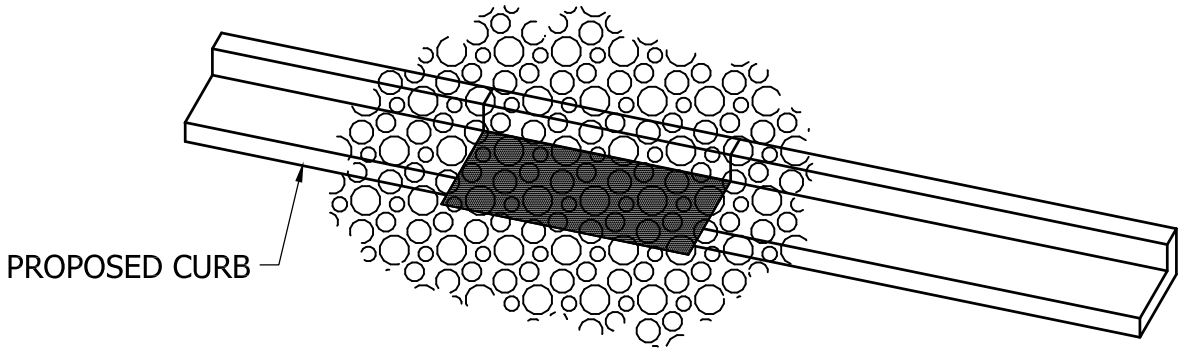


= DIRECTION OF SURFACE FLOW

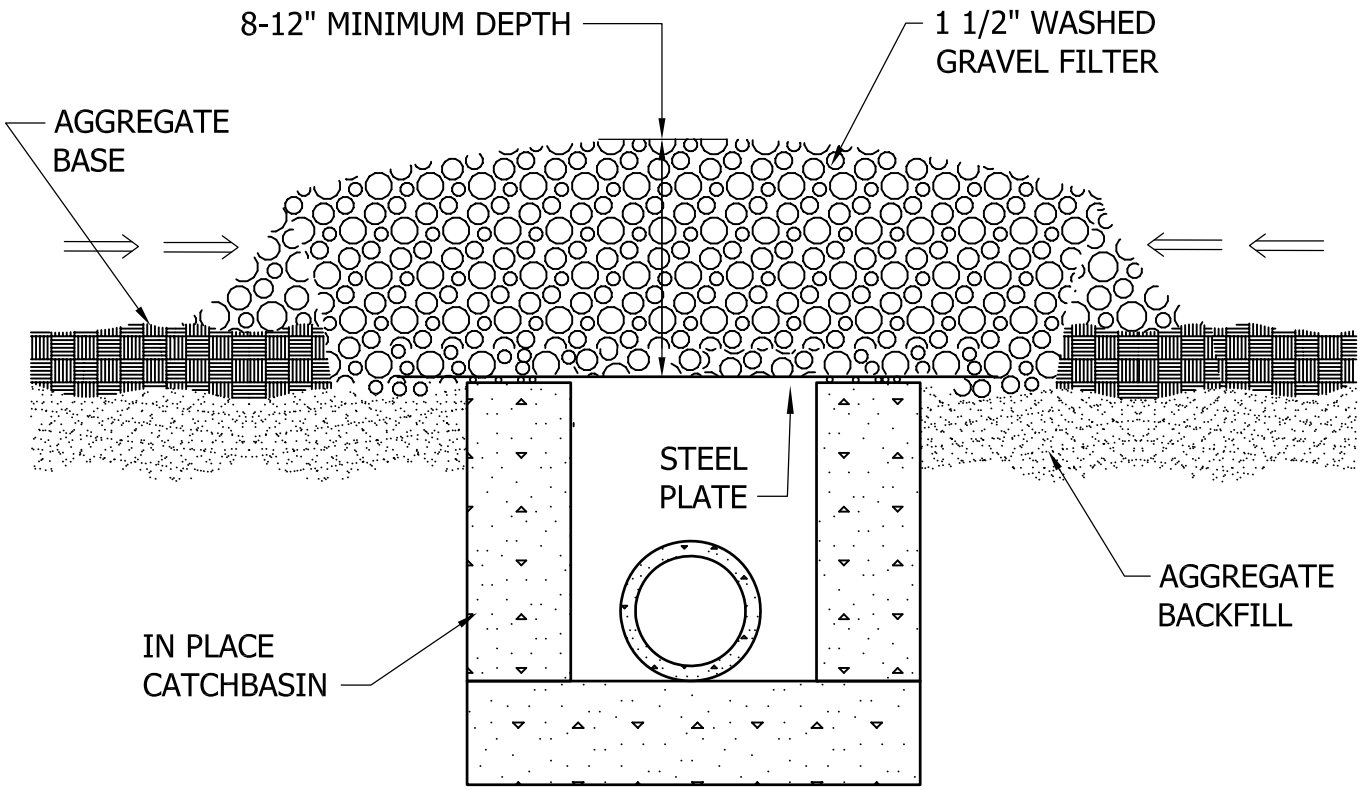


# INLET PROTECTION ROCK FILTER FOR CATCH BASIN

HUDSON, WISCONSIN

PLATE NO. ERO-5

MARCH 2013

Hudson, WI

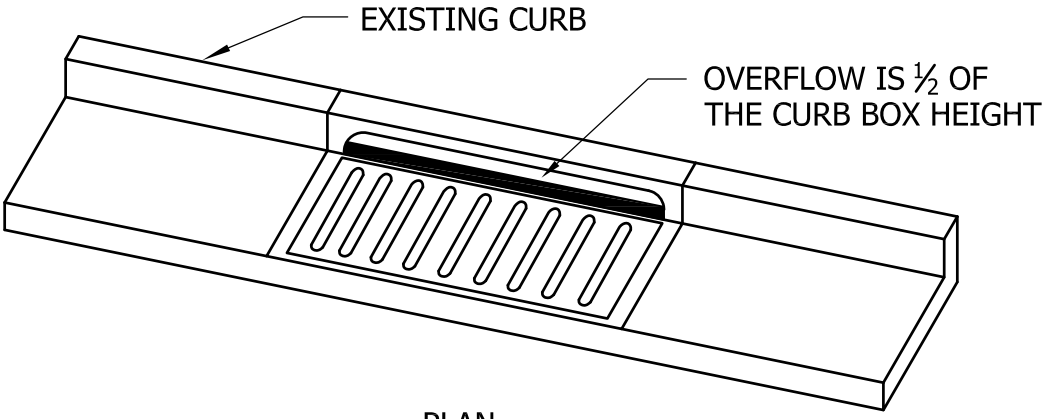


PLAN

WIMCO ROAD DRAIN CG-23* HIGH FLOW
INLET PROTECTION CURB AND GUTTER MODEL
OR CITY APPROVED EQUAL.

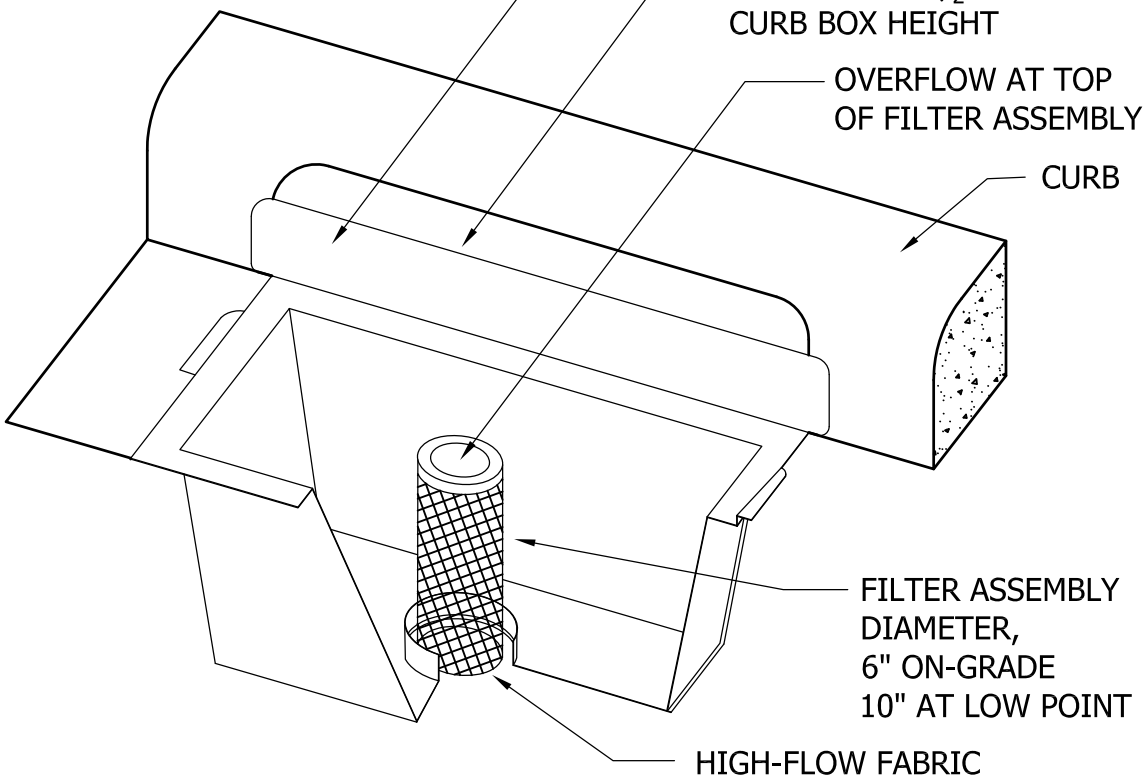


* FOR THE R-3290-VB STANDARD CASTING,
INSTALL WIMCO ROAD DRAIN
CG-3290 OR CITY APPROVED EQUAL.

## CATCH BASIN INLET PROTECTION FOR AFTER PAVING

HUDSON, WISCONSIN

PLATE NO. ERO-6

MARCH 2013

Hudson, WI

A. HAY BALES OFFSET IN THE CENTER

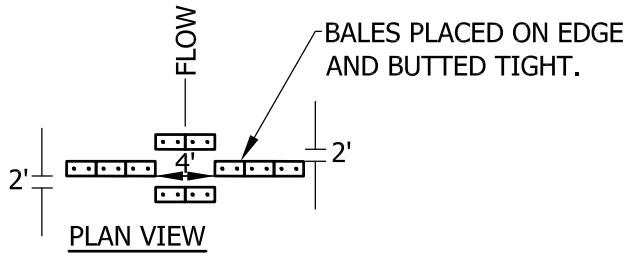


B. HAY BALES END TO END

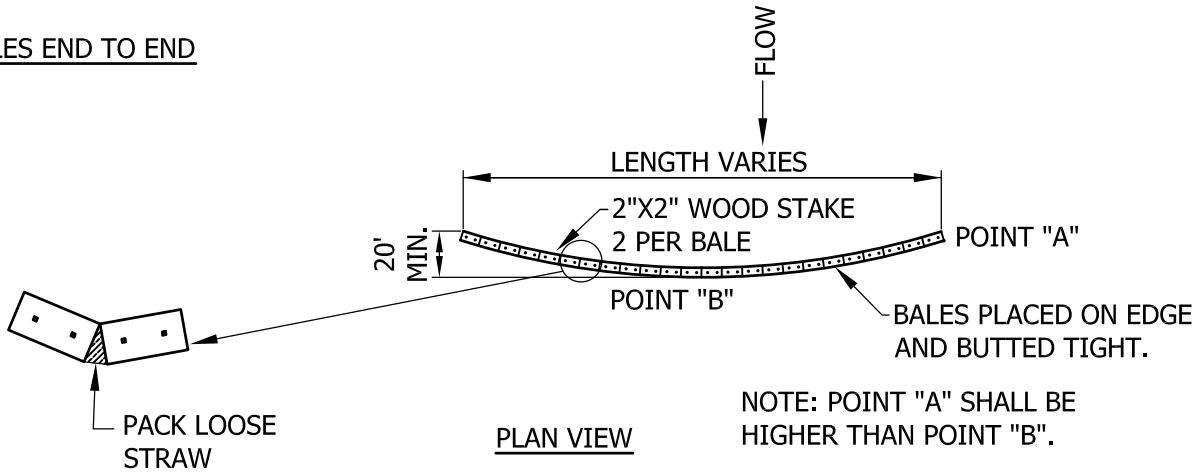


NOTE: POINT "A" SHALL BE HIGHER THAN POINT "B".

C. SILT FENCE WITH ROCK DIVERSION MOUND

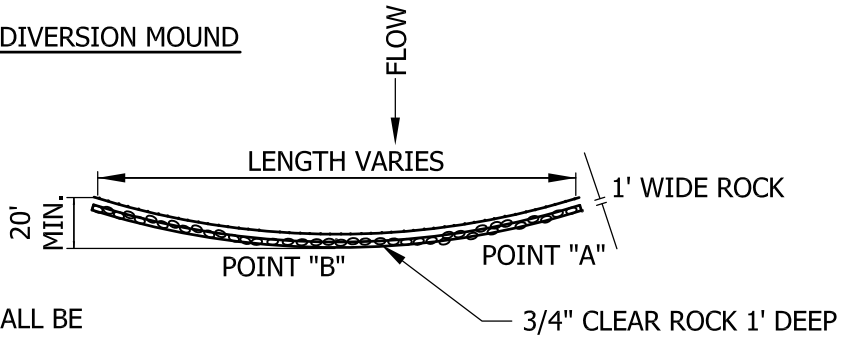


NOTE: POINT "A" SHALL BE HIGHER THAN POINT "B".

PLAN VIEW

BALE DETAIL

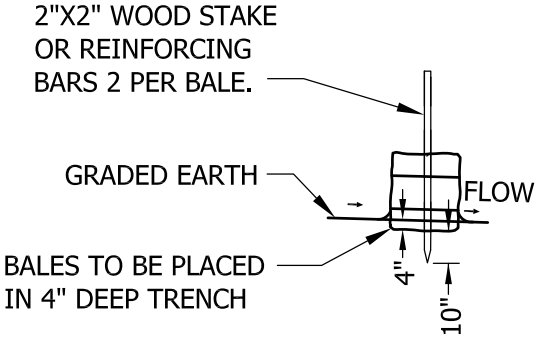


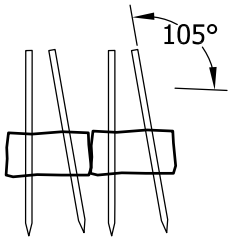


| SPACING FOR ALL DITCH BLOCKS: SPACING DITCH GRADE | |
|---|---|
| (%) | (FT) |
| 2 | 100 |
| 4 | 75 |
| 6 | 50 |
| 8 | 40 |
| 10 | 25 |
| 10+ | 25 |

# DITCH BLOCKING

HUDSON, WISCONSIN

PLATE NO. ERO-7

MARCH 2013

Hudson, WI

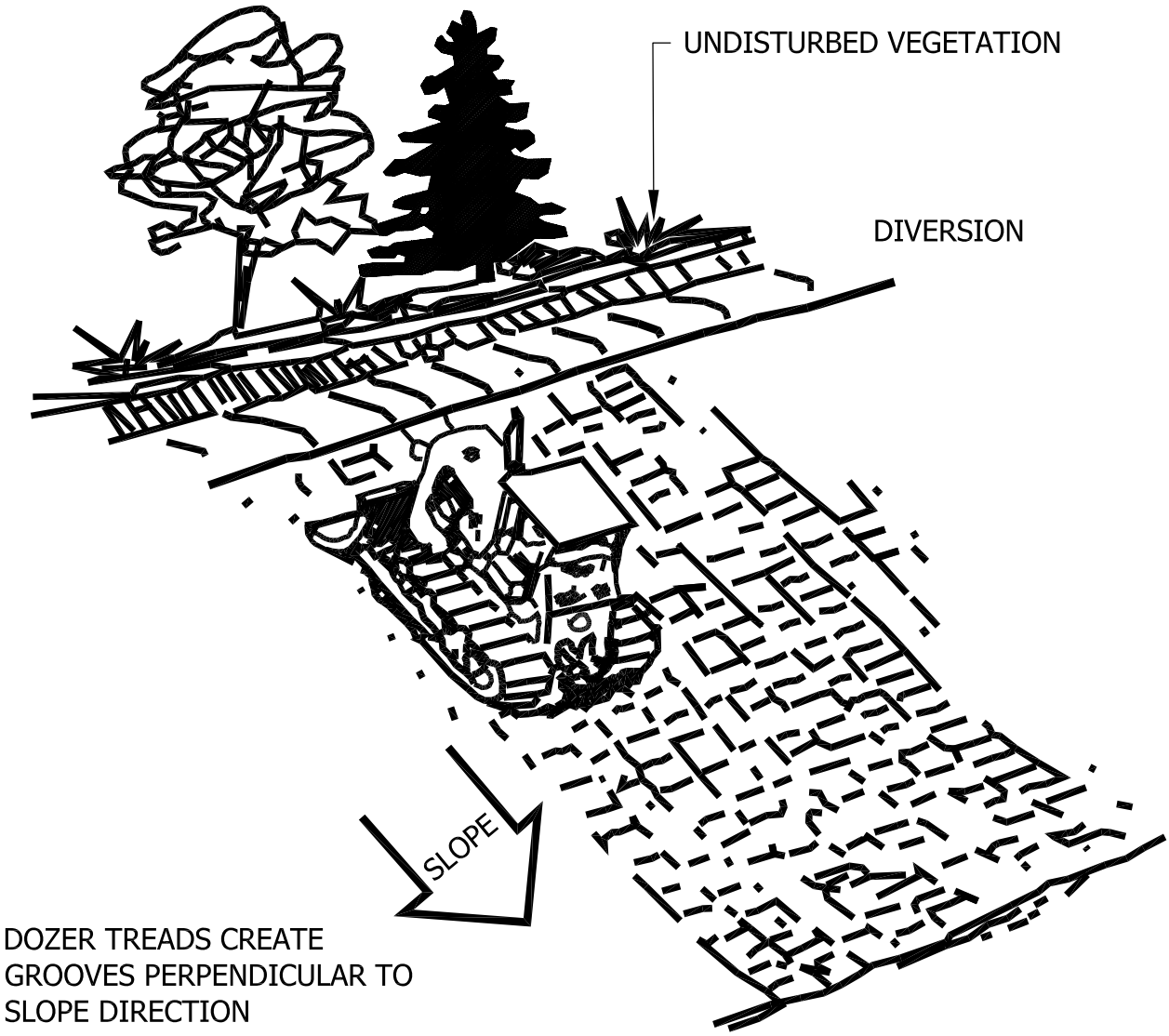


TEMPORARY SLOPE GRADING

HUDSON, WISCONSIN

PLATE NO. ERO-8

MARCH 2013

Hudson, WI

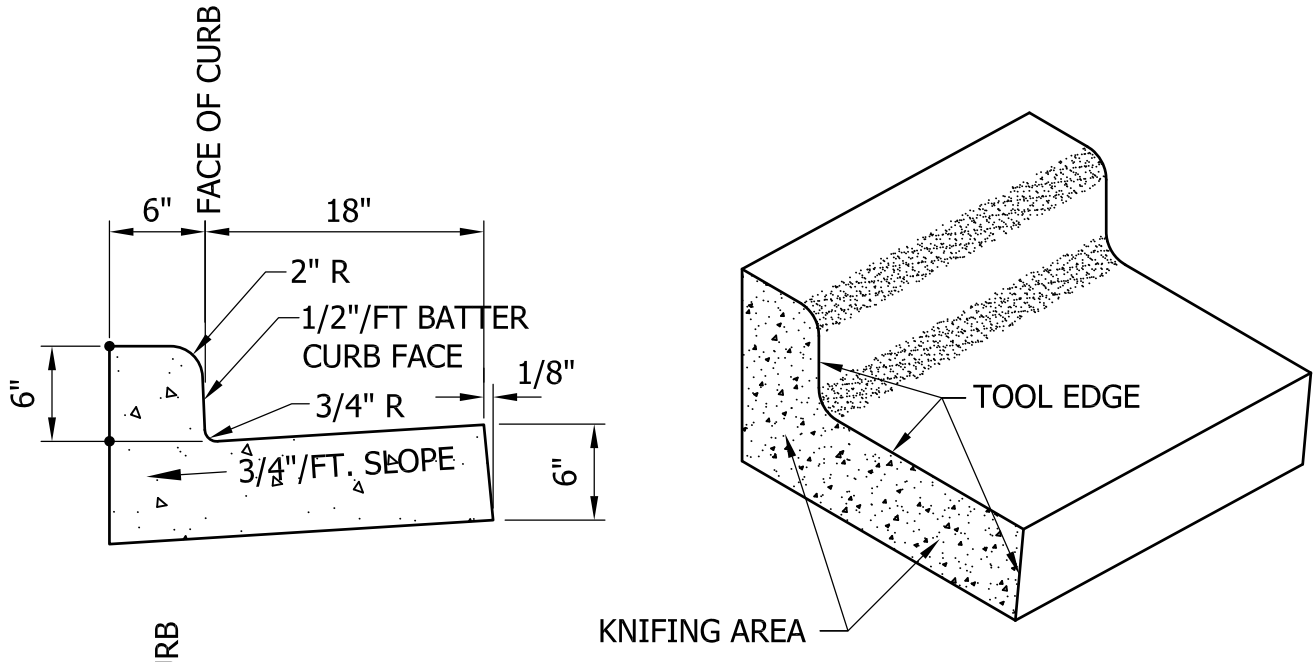


TYPE D24 CONCRETE CURB & GUTTER

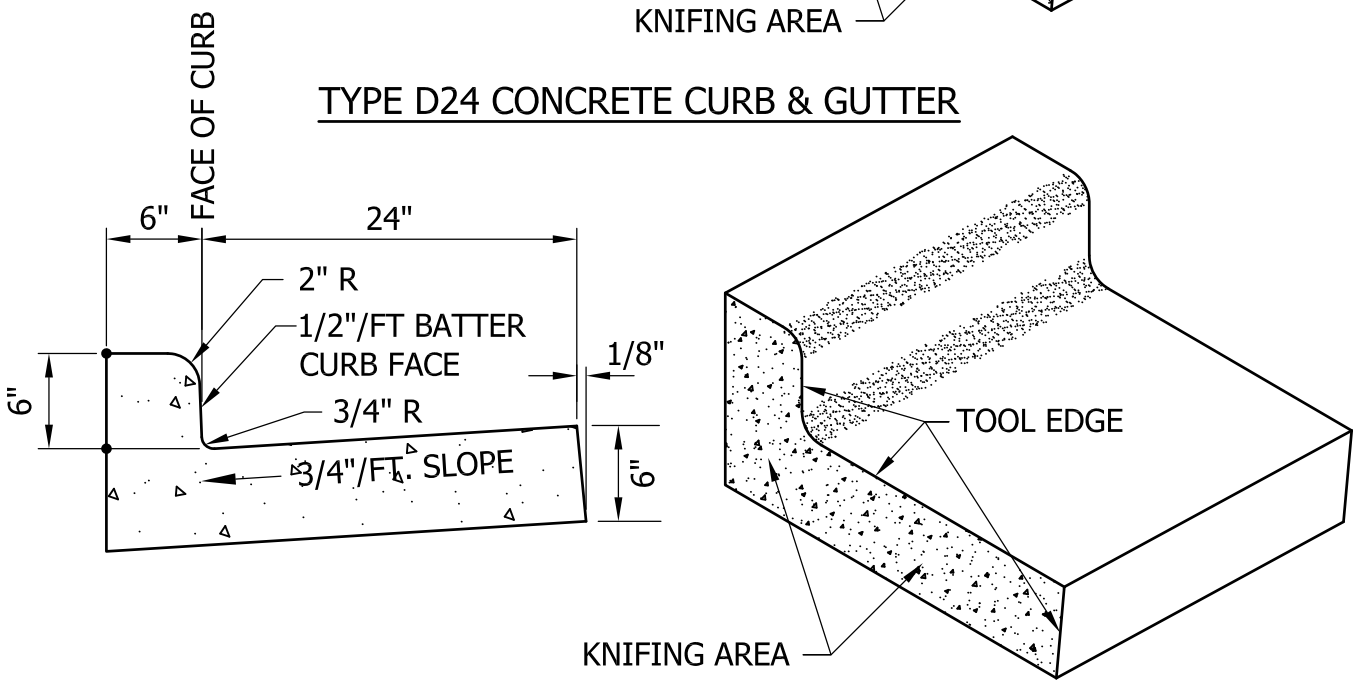


TYPE D30 CONCRETE CURB & GUTTER

NOTES:

1. ALL EXPANSION AND CONSTRUCTION JOINTS SHALL BE TOOLED ALONG ENTIRE TOP AND FACE OF CURB AND GUTTER AND KNIFED THROUGH ENTIRE DEPTH.
2. FOR CURB & GUTTER IN AREA OF PEDESTRIAN RAMP, SEE DETAIL PLATE STR-11 OR STR-12.

CONCRETE CURB & GUTTER

HUDSON, WISCONSIN

PLATE NO. STR-1

MARCH 2013

Hudson, WI

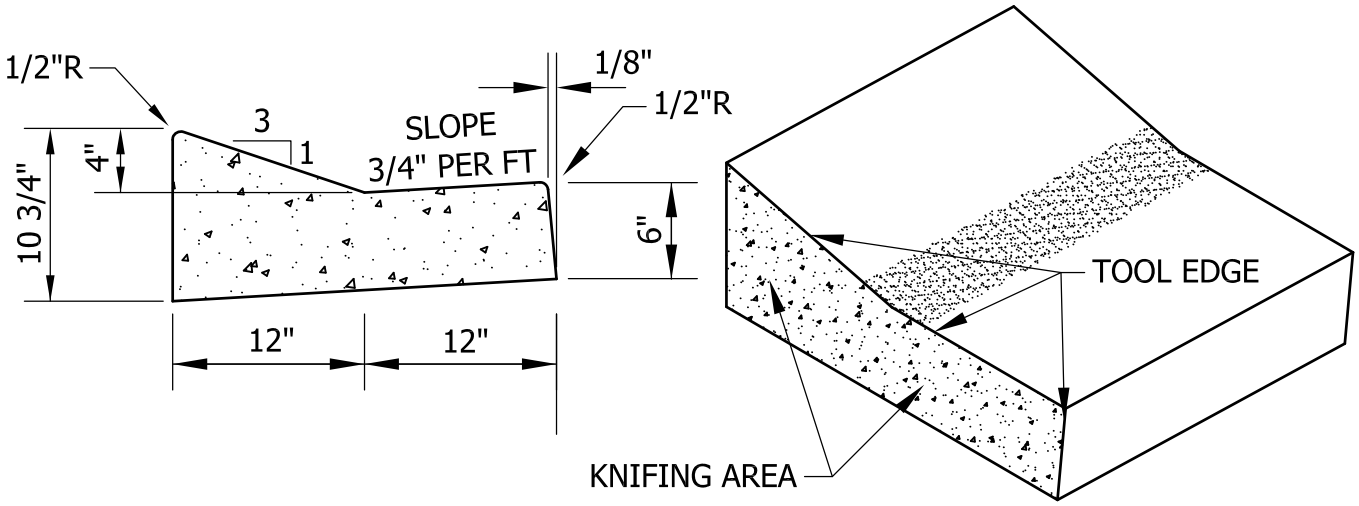


SURMOUNTABLE

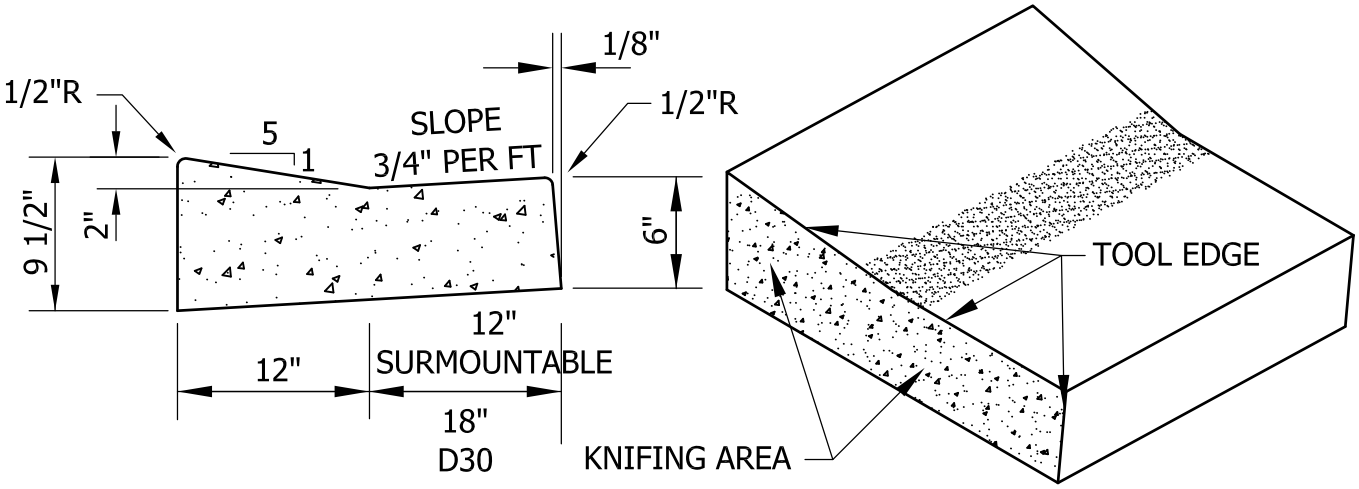


DRIVEWAY

NOTES:

1. ALL EXPANSION AND CONSTRUCTION JOINTS SHALL BE TOOLED ALONG ENTIRE TOP AND FACE OF CURB AND GUTTER AND KNIFED THROUGH ENTIRE DEPTH.
2. FOR CURB & GUTTER IN AREAS OF PEDESTRIAN RAMP, SEE DETAIL PLATE STR-11 OR STR-12.

SURMOUNTABLE AND DRIVEWAY CURB & GUTTER

HUDSON, WISCONSIN

PLATE NO. STR-2

MARCH 2013

Hudson, WI

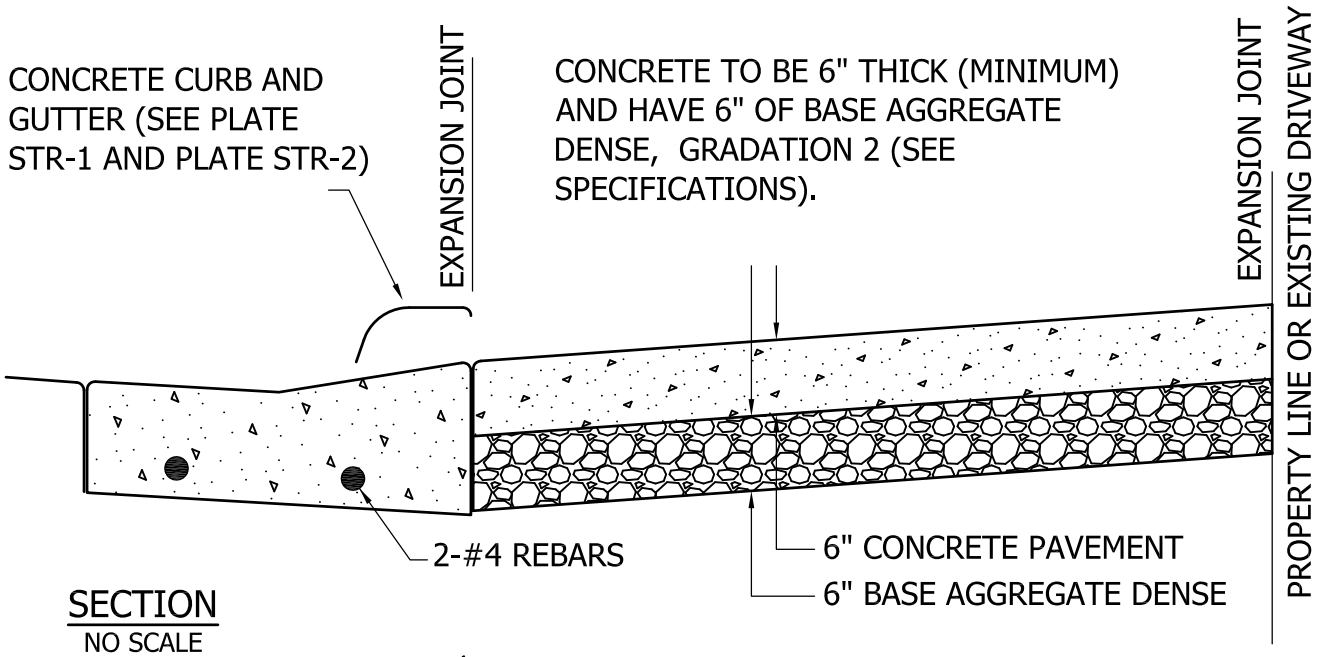


SECTION
NO SCALE

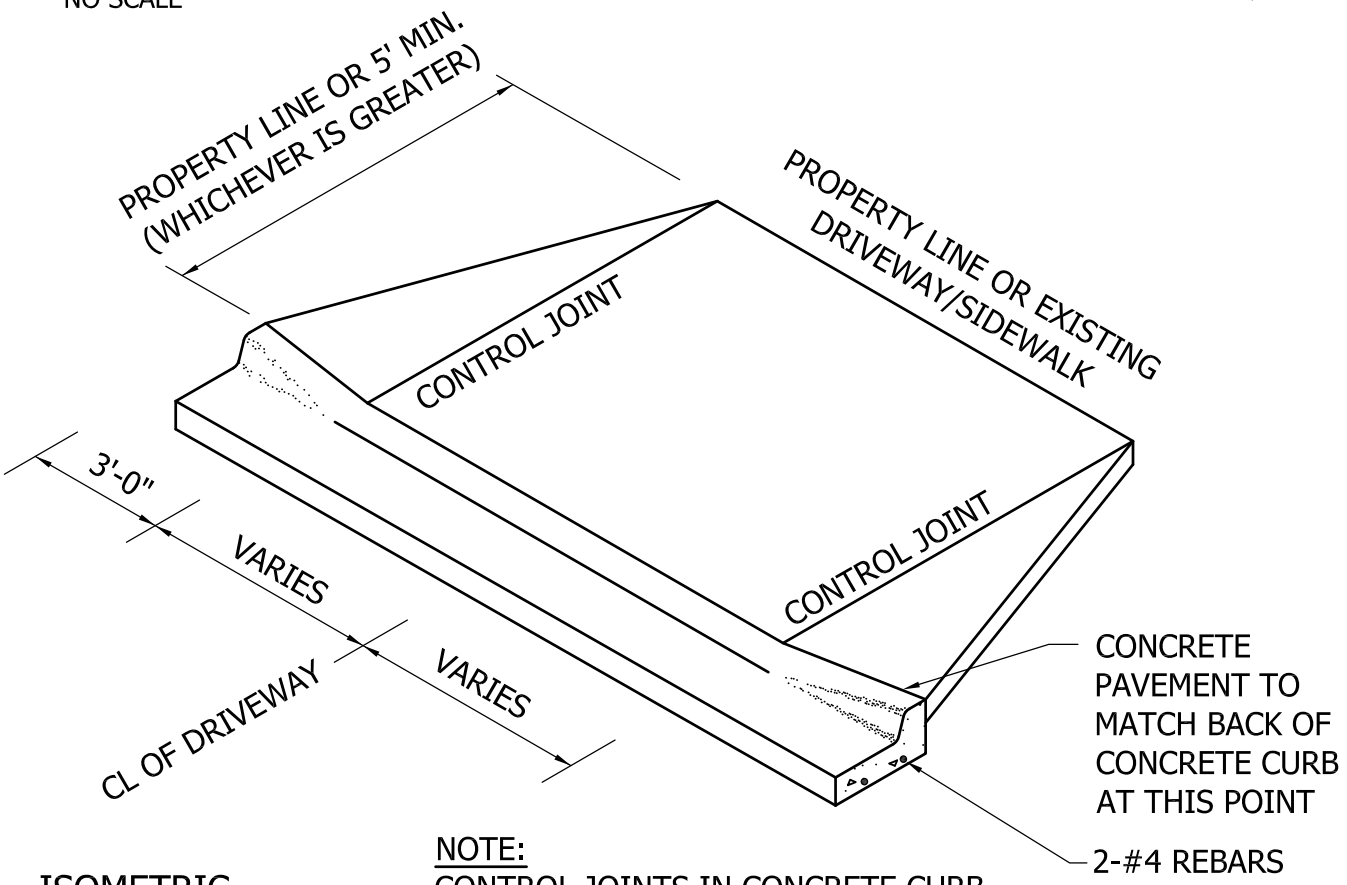


ISOMETRIC
NO SCALE

NOTE:
CONTROL JOINTS IN CONCRETE CURB NOT TO EXCEED 10' SPACING THROUGH DRIVEWAY SECTION.

# RESIDENTIAL CONCRETE DRIVEWAY APRON

HUDSON, WISCONSIN

PLATE NO. STR-3

JULY 2013

Hudson, WI

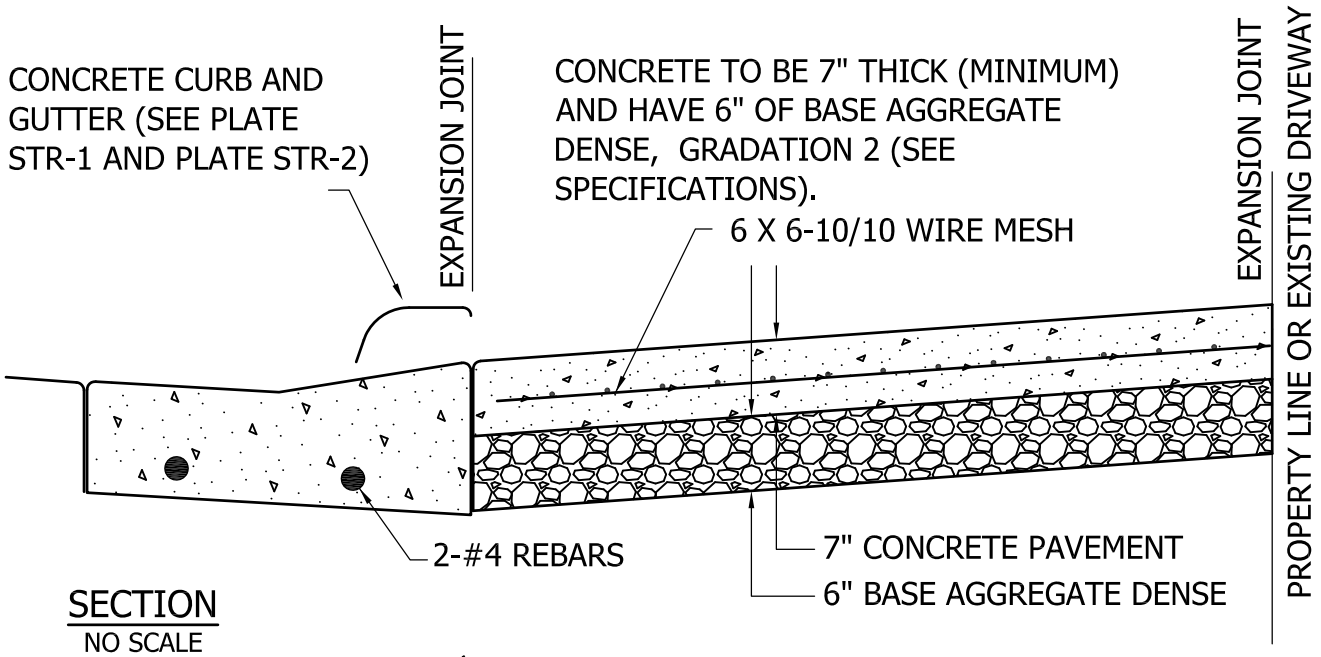


SECTION
NO SCALE

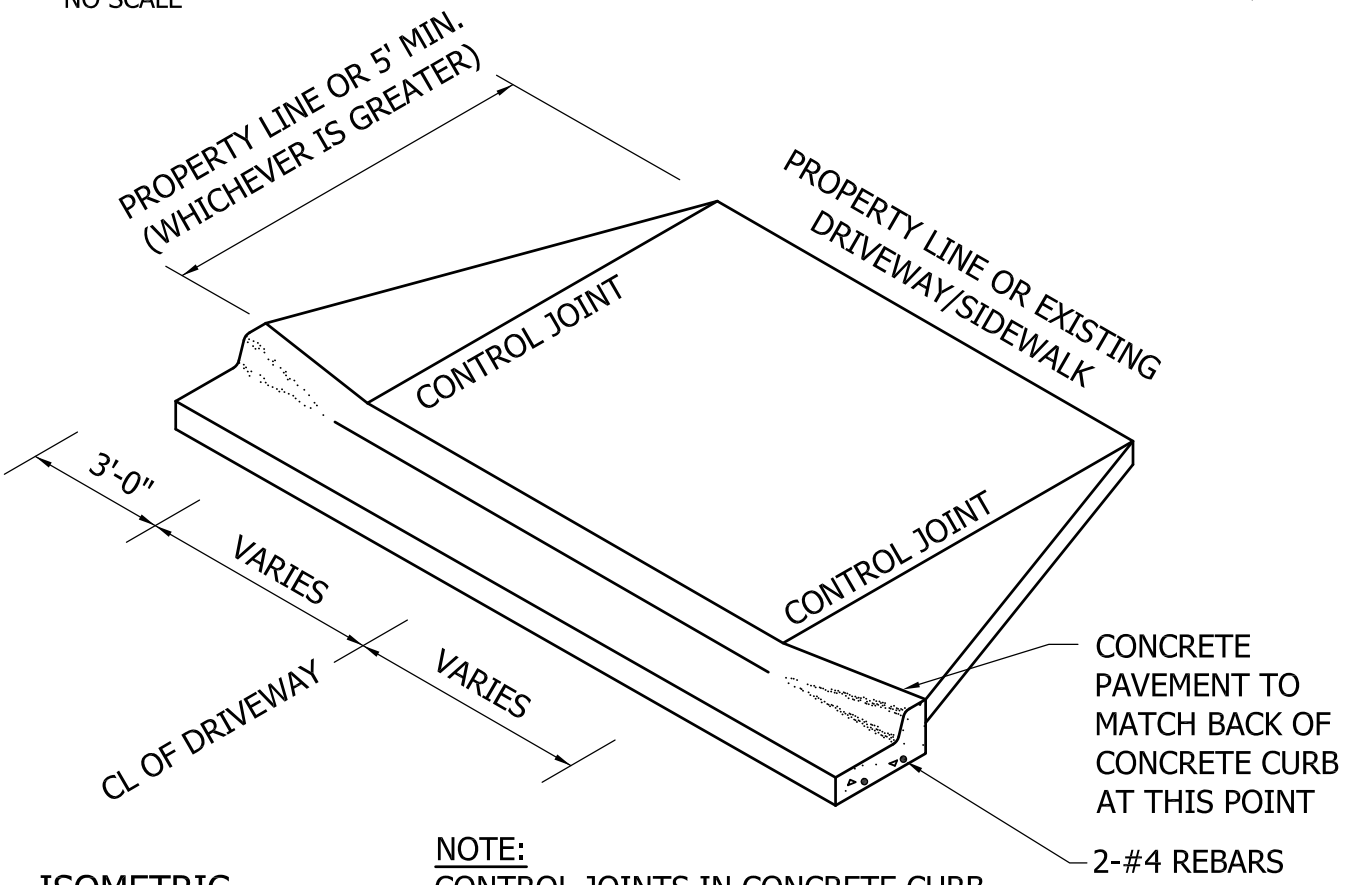


ISOMETRIC
NO SCALE

NOTE:
CONTROL JOINTS IN CONCRETE CURB NOT TO EXCEED 10' SPACING THROUGH DRIVEWAY SECTION.

ALLEY CONCRETE DRIVEWAY APRON

HUDSON, WISCONSIN

PLATE NO. STR-3A

JULY 2013

Hudson, WI

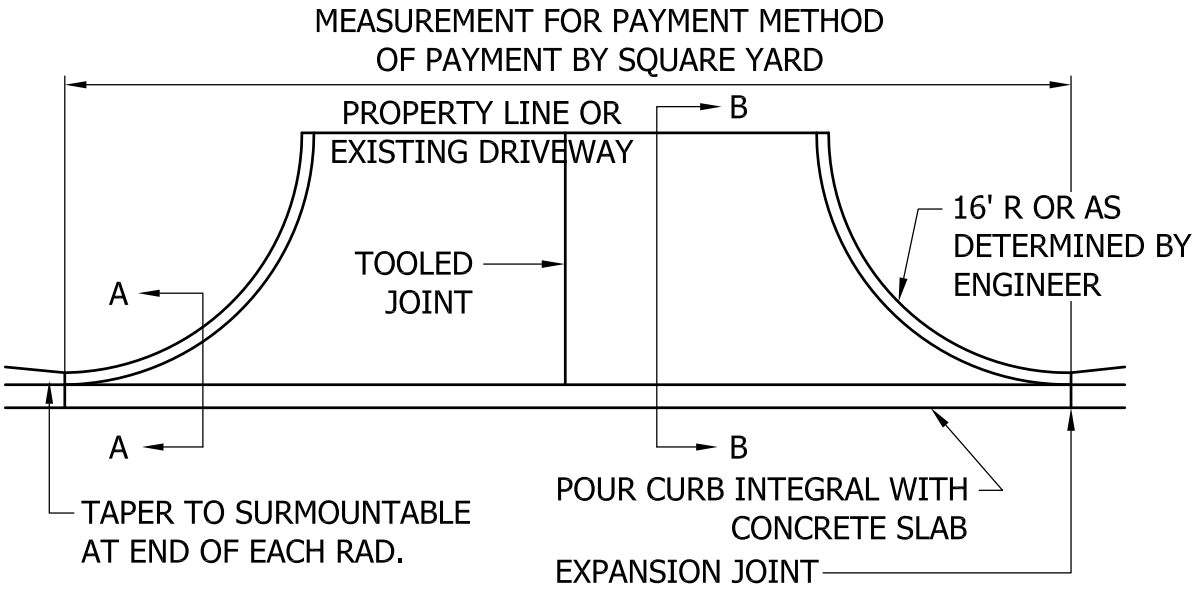


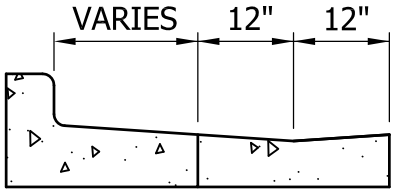


SECTION A-A

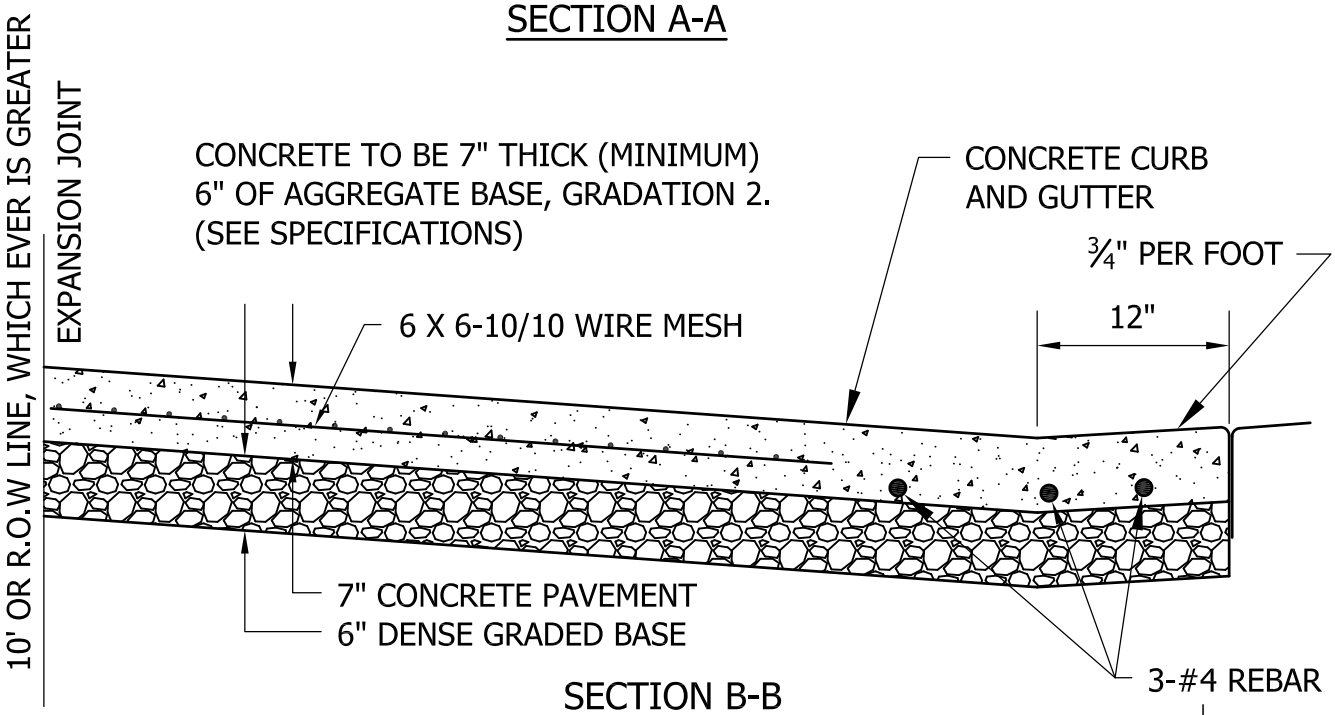


SECTION B-B
THRU CONCRETE APRON

COMMERCIAL DRIVEWAY CONCRETE APRON WITH CURB

HUDSON, WISCONSIN

PLATE NO. STR-5

MARCH 2013

Hudson, WI

NOTE:
SURMOUNTABLE CURB & GUTTER TO BE FORMED INTO A D24 TYPE AT CATCHBASIN.

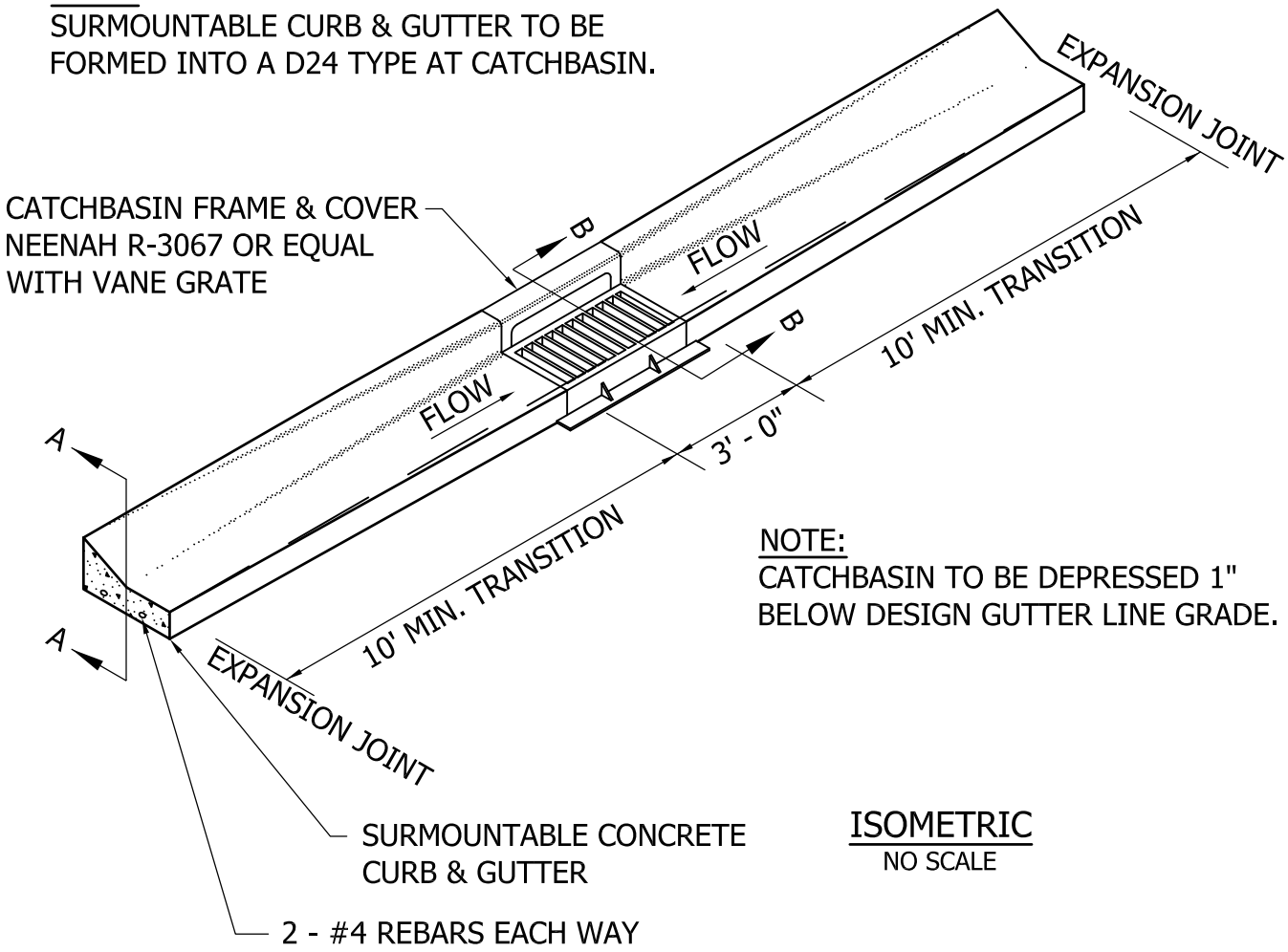


NOTE:
CATCHBASIN TO BE DEPRESSED 1" BELOW DESIGN GUTTER LINE GRADE.

ISOMETRIC
NO SCALE

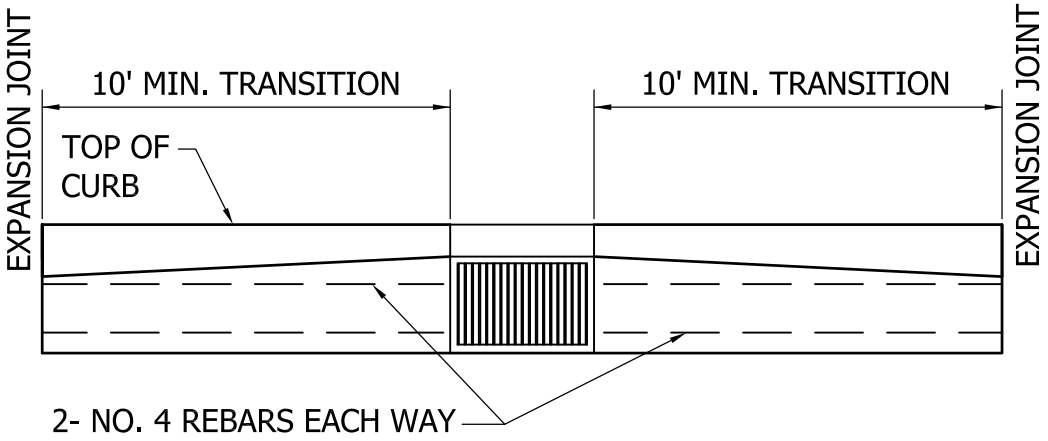


PLAN VIEW
NO SCALE

SURMOUNTABLE CURB & GUTTER
CONSTRUCTION AT CATCH BASIN (1 of 2)

HUDSON, WISCONSIN

PLATE NO. STR-6A

MARCH 2013

Hudson, WI

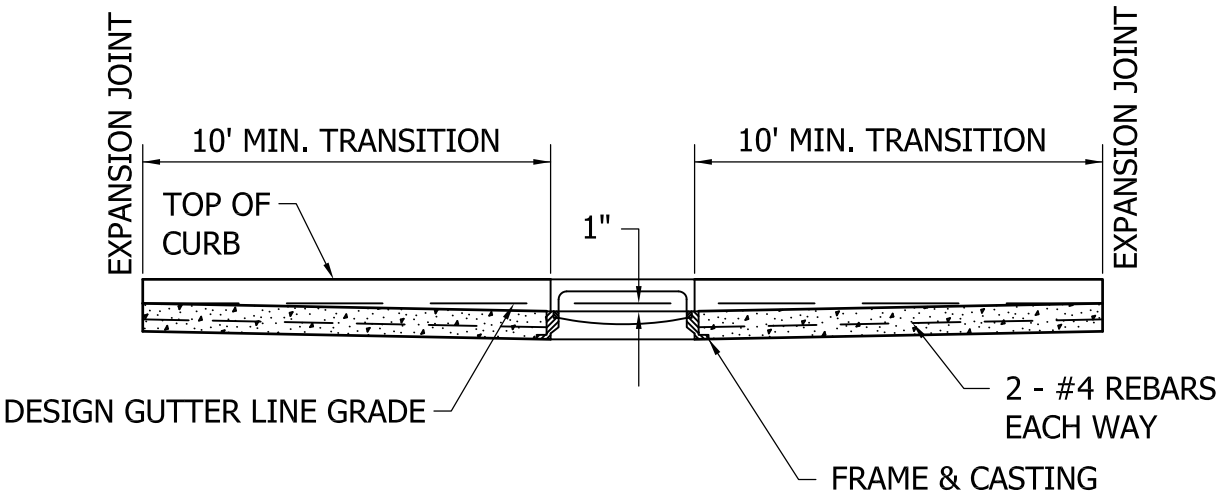


SECTION A-A

NO SCALE

NOTE:

EXPANSION JOINTS 10' MIN. FROM CATCH BASINS

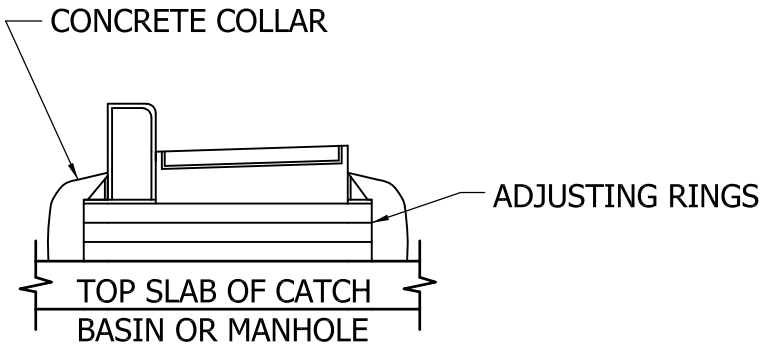


SECTION B-B

NO SCALE

SURMOUNTABLE CURB & GUTTER CONSTRUCTION AT CATCH BASIN (2 of 2)

HUDSON, WISCONSIN

PLATE NO. STR-6B

MARCH 2013

Hudson, WI

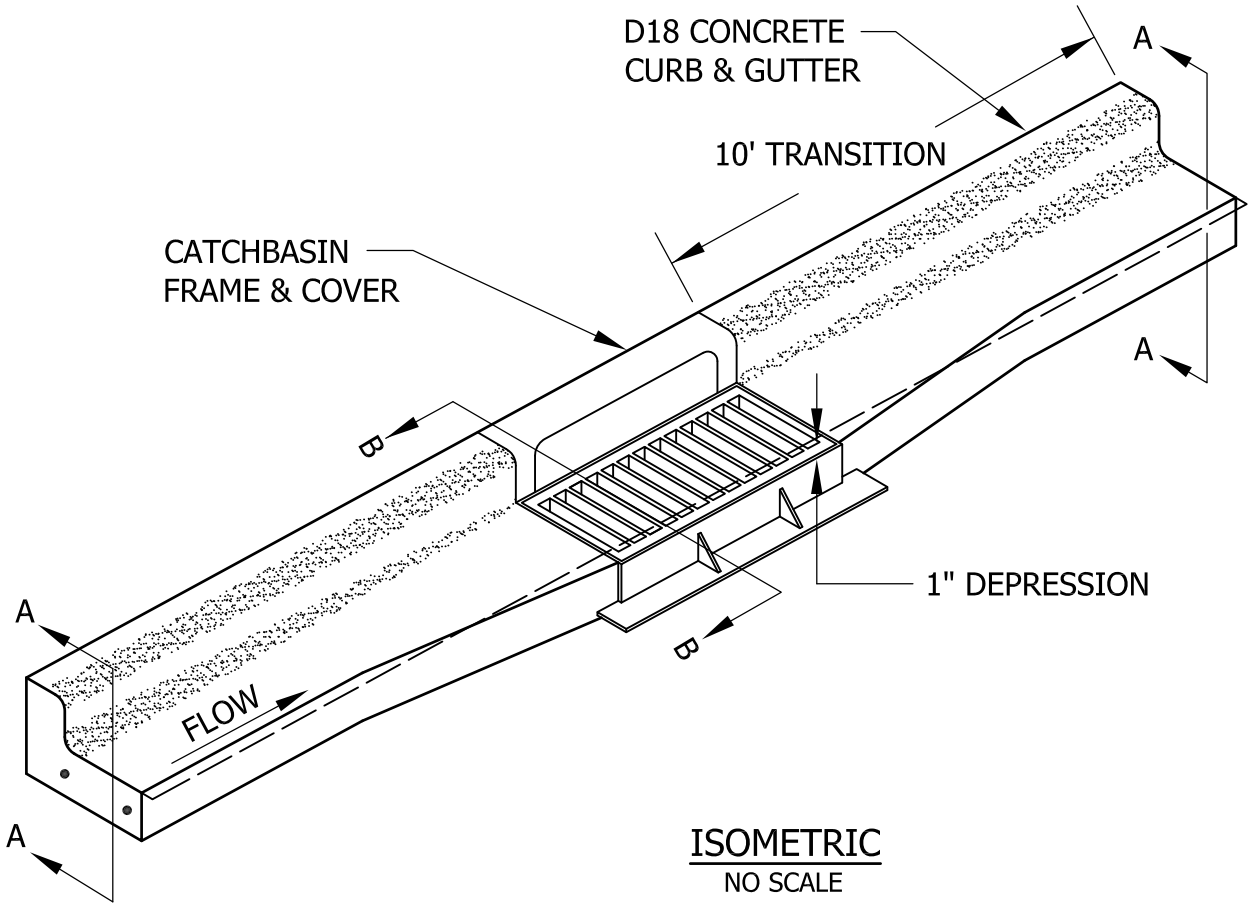


ISOMETRIC
NO SCALE

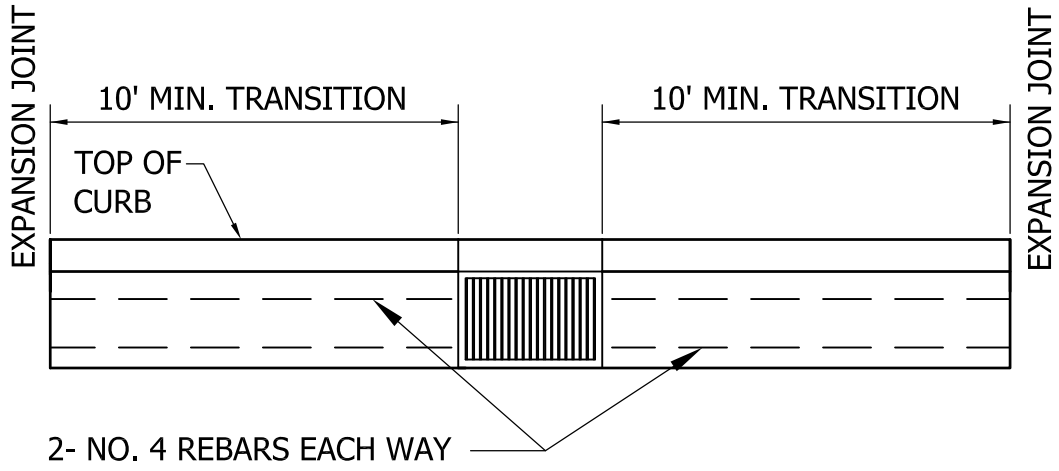


PLAN VIEW
NO SCALE

D18 CURB & GUTTER AT CATCH BASIN (1 of 2)

HUDSON, WISCONSIN

PLATE NO. STR-7A

MARCH 2013

Hudson, WI

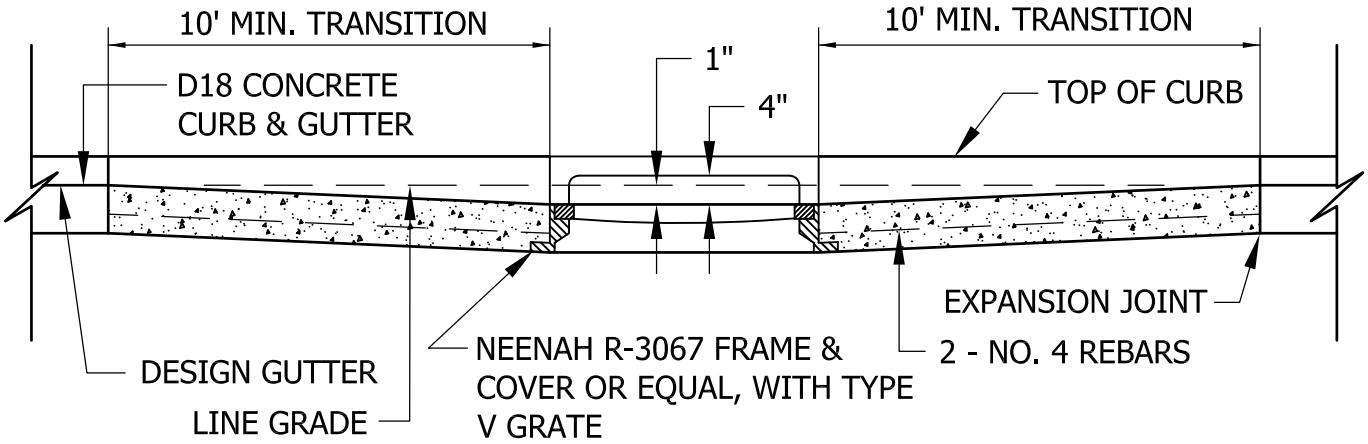


SECTION A-A

NO SCALE

NOTE:

EXPANSION JOINTS 10' MIN. FROM CATCH BASINS

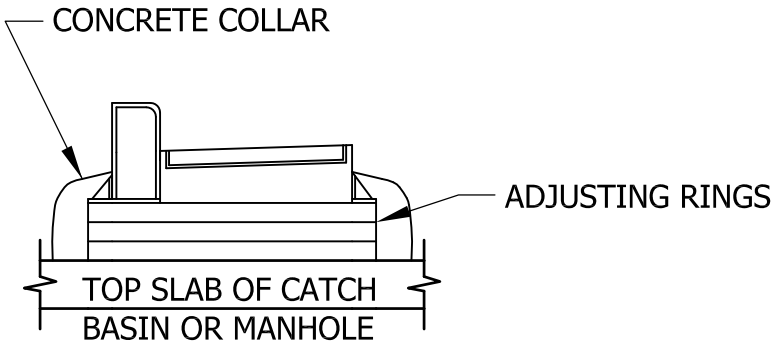


SECTION B-B

NO SCALE

D18 CURB & GUTTER AT CATCH BASIN (2 of 2)

HUDSON, WISCONSIN

PLATE NO. STR-7B

MARCH 2013

Hudson, WI

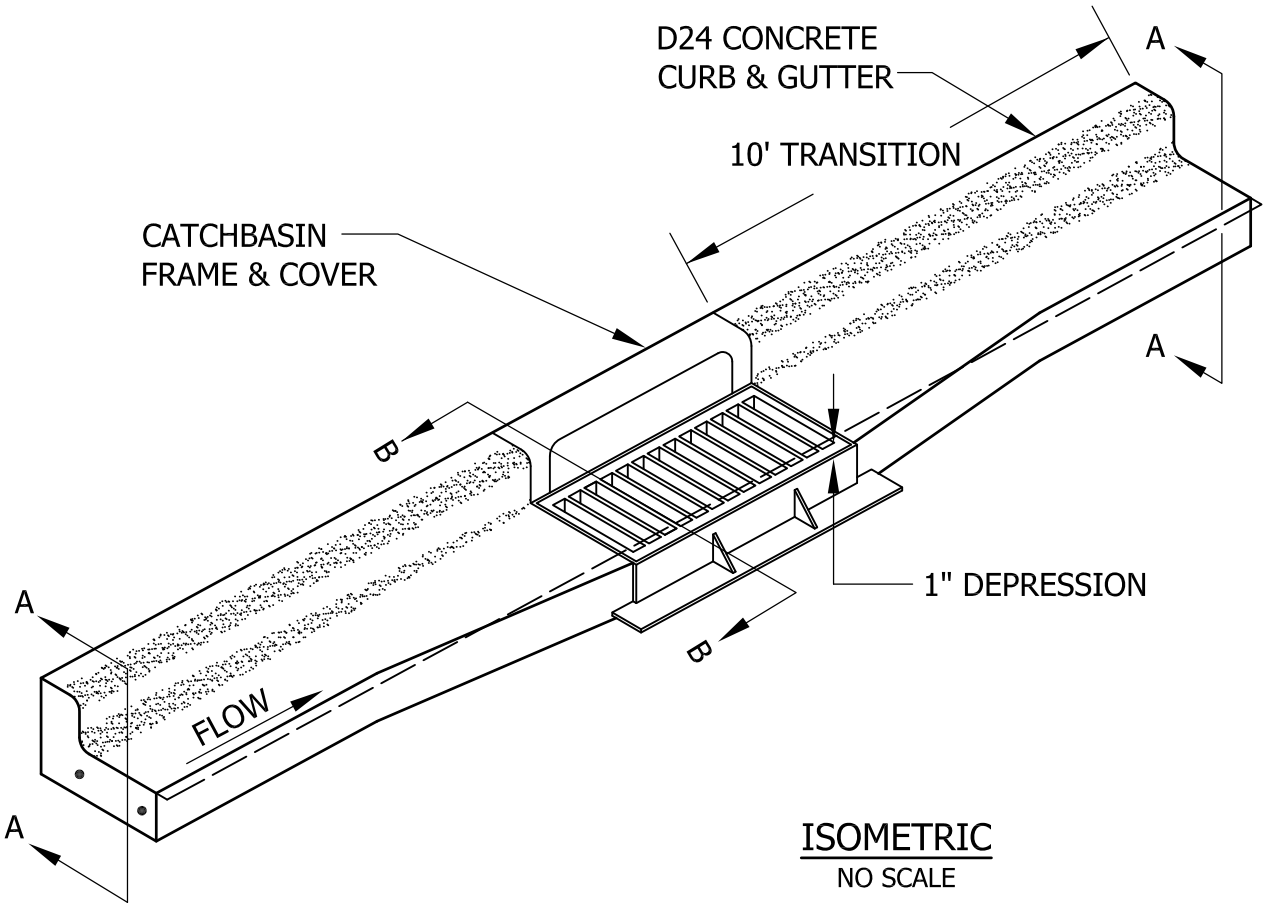


ISOMETRIC
NO SCALE

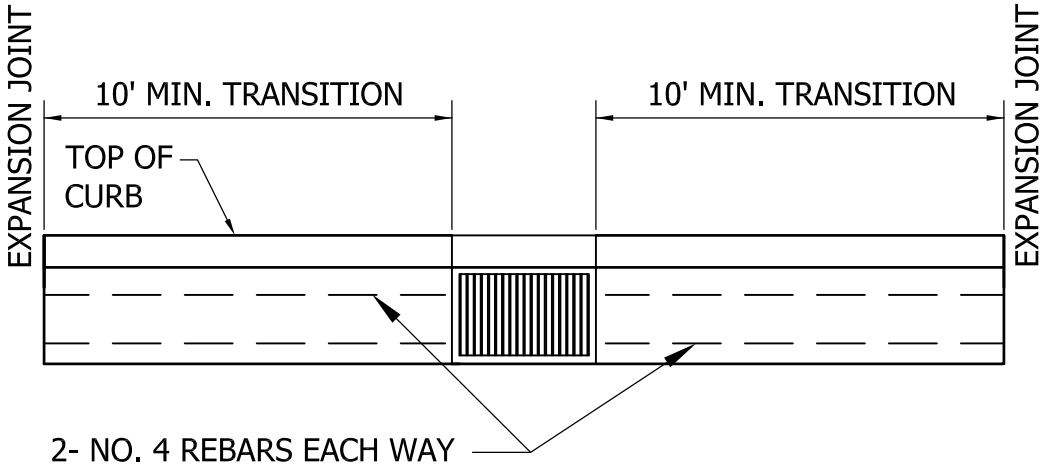


PLAN VIEW
NO SCALE

# D24 CURB & GUTTER AT CATCH BASIN (1 of 2)

HUDSON, WISCONSIN

PLATE NO. STR-8A

MARCH 2013

Hudson, WI

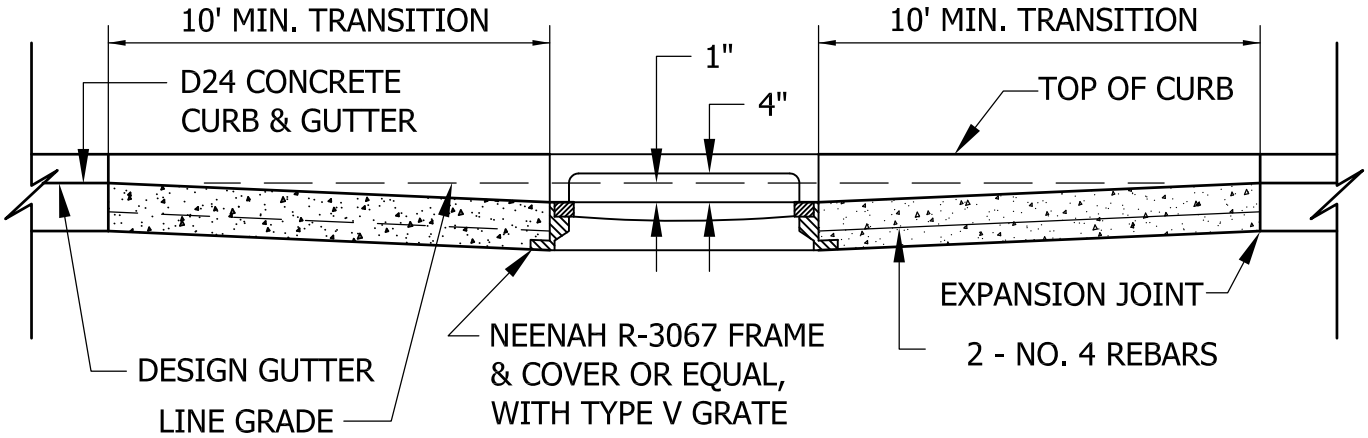


SECTION A-A
NO SCALE

NOTE:
EXPANSION JOINTS 10' MIN. FROM CATCH BASINS

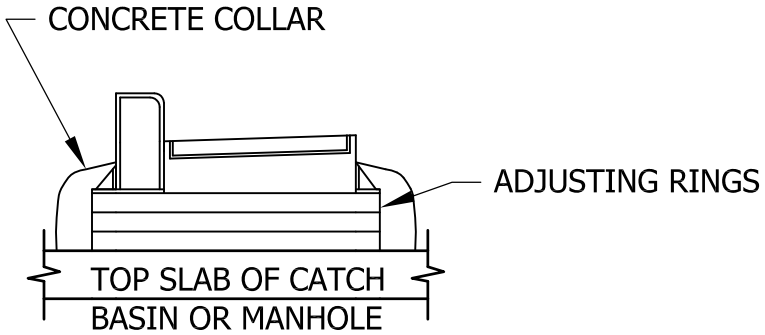


SECTION B-B
NO SCALE

D24 CURB & GUTTER AT CATCH BASIN (2 of 2)

HUDSON, WISCONSIN

PLATE NO. STR-8B

MARCH 2013

Hudson, WI

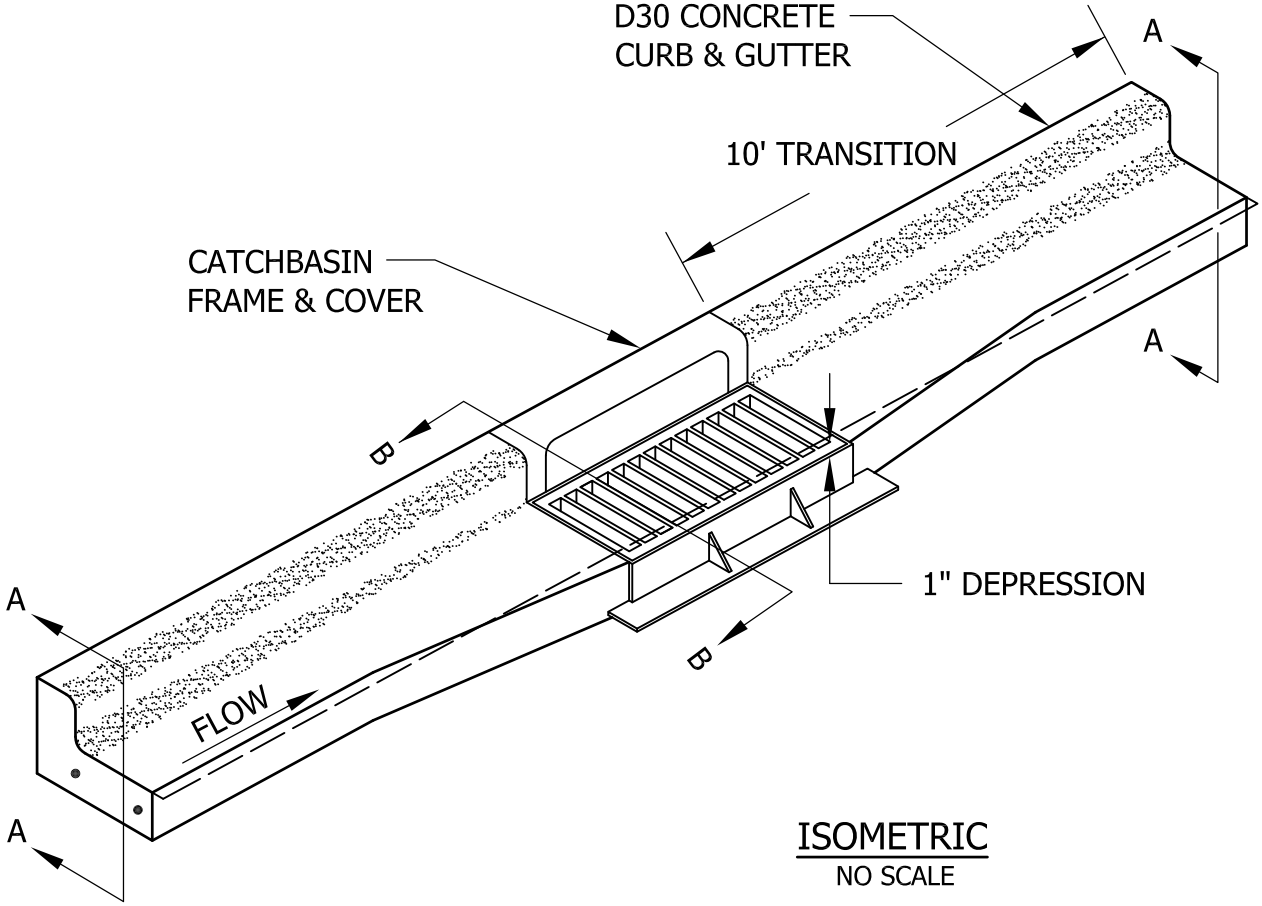


ISOMETRIC
NO SCALE

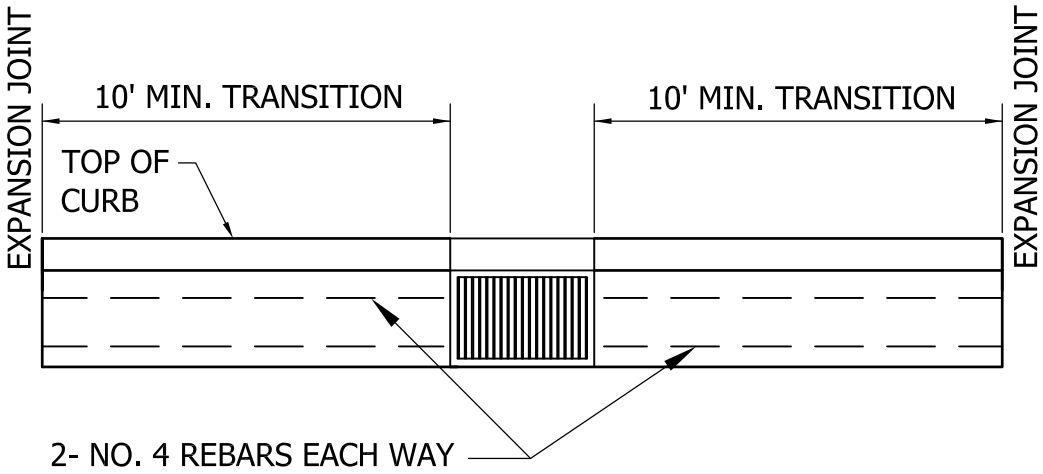


PLAN VIEW
NO SCALE

# D30 CURB & GUTTER AT CATCH BASIN (1 of 2)

HUDSON, WISCONSIN

PLATE NO. STR-9A

MARCH 2013

Hudson, WI

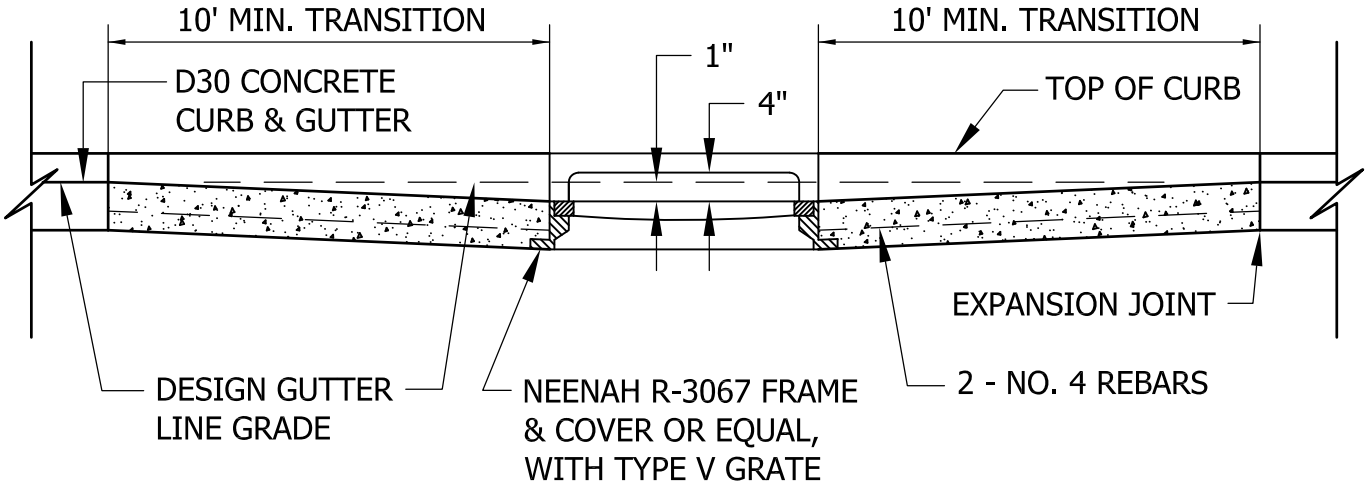


SECTION A-A

NO SCALE

NOTE:

EXPANSION JOINTS 10' MIN. FROM CATCH BASINS

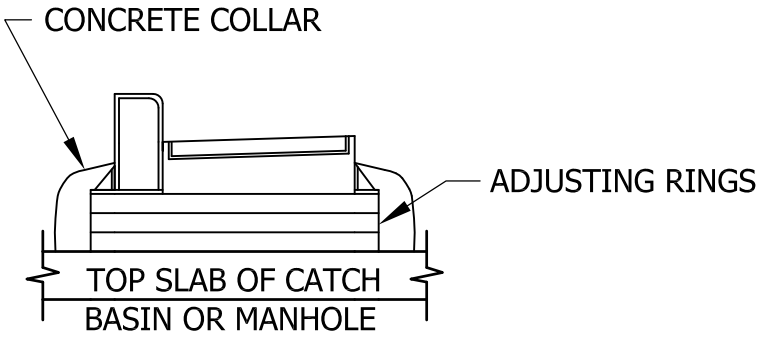


SECTION B-B

NO SCALE

D30 CURB & GUTTER AT CATCH BASIN (2 of 2)

HUDSON, WISCONSIN

PLATE NO. STR-9B

MARCH 2013

Hudson, WI

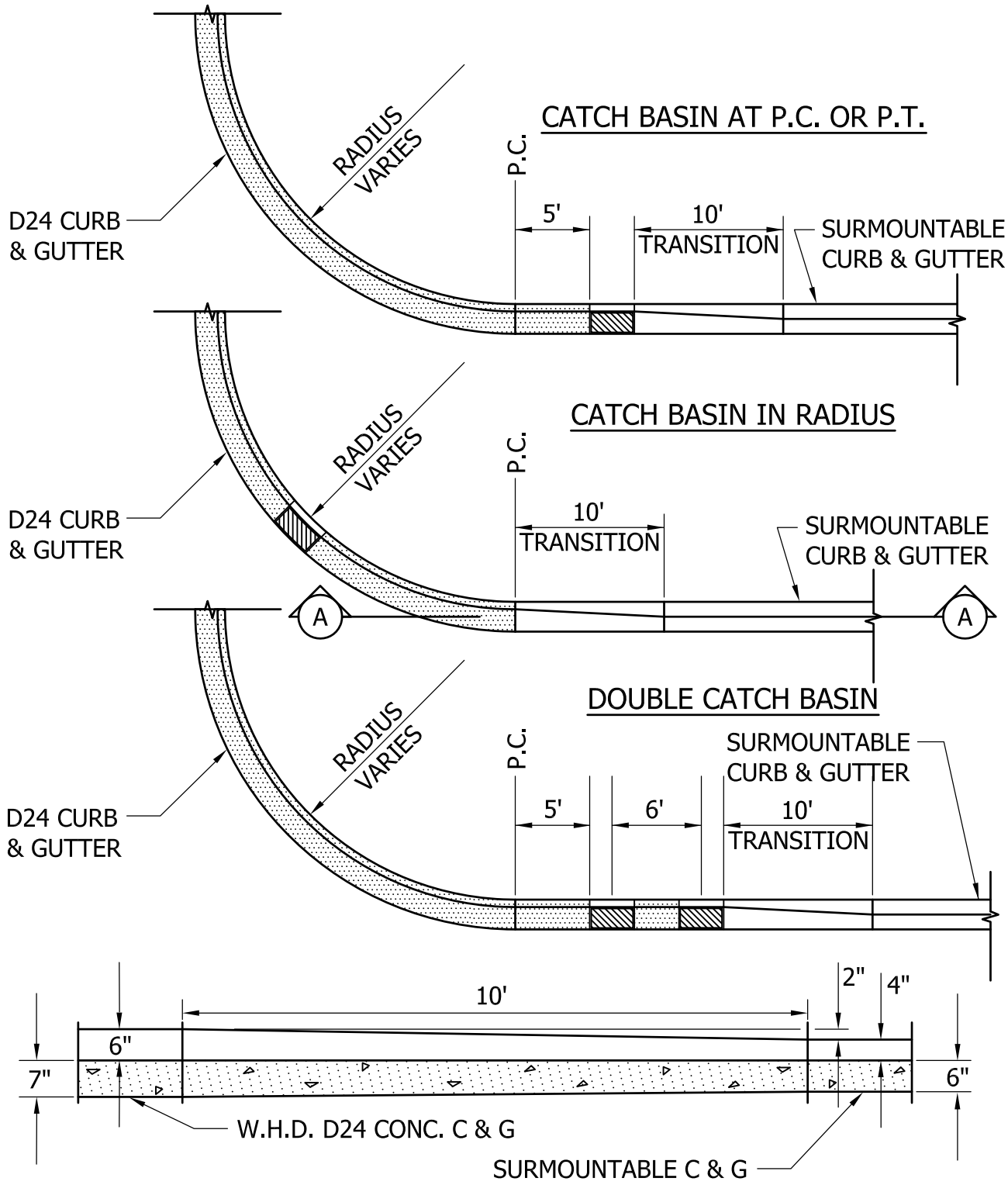


NOTE: ALL RADII "D" STYLE

SECTION A-A

CONCRETE CURB & GUTTER TRANSITION

HUDSON, WISCONSIN

PLATE NO. STR-10

MARCH 2013

Hudson, WI

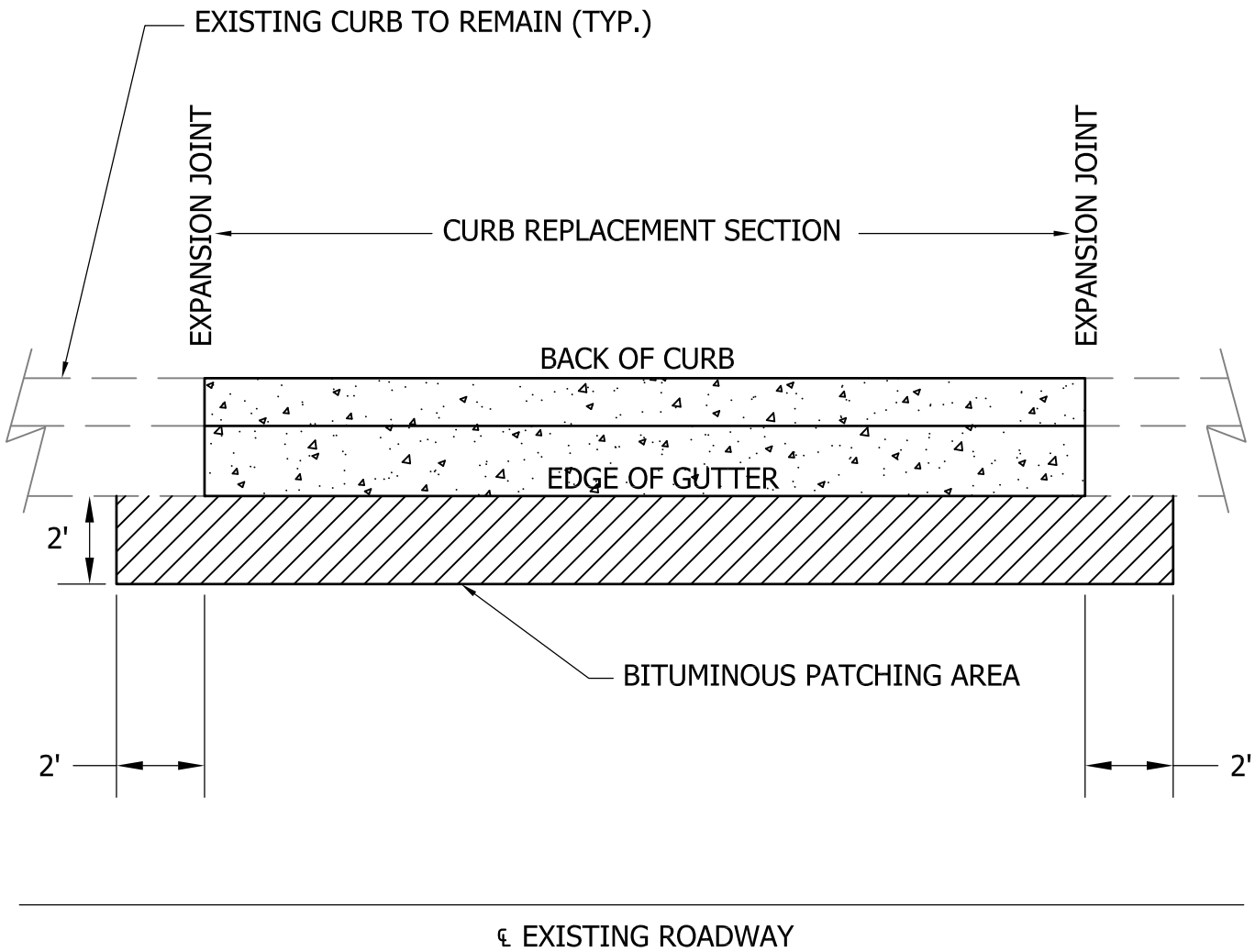


NOTES:

1. SAWCUT CURB AT REMOVAL LIMITS BEFORE REMOVING CURB. REMOVAL LIMITS WILL BE AT EXISTING CONTRACTION JOINTS OR HALF-WAY BETWEEN EXISTING CONTRACTION JOINTS.
2. CONCRETE CURB AND GUTTER PLACEMENT PER STR-1 OR STR-2.
3. BITUMINOUS PATCHING IS REQUIRED IF THE EXISTING BITUMINOUS EDGE IS DAMAGED AT THE EDGE OF GUTTER.
4. BITUMINOUS PATCHING MAY NOT BE REQUIRED, AT THE DISCRETION OF THE ENGINEER, IF THE EXISTING BITUMINOUS EDGE IS NOT DAMAGED AND THE NEW CURB CAN BE FORMED AGAINST THE EXISTING EDGE.

## CONCRETE CURB & GUTTER REPLACEMANT

HUDSON, WISCONSIN

PLATE NO. STR-10A

MARCH 2013

Hudson, WI

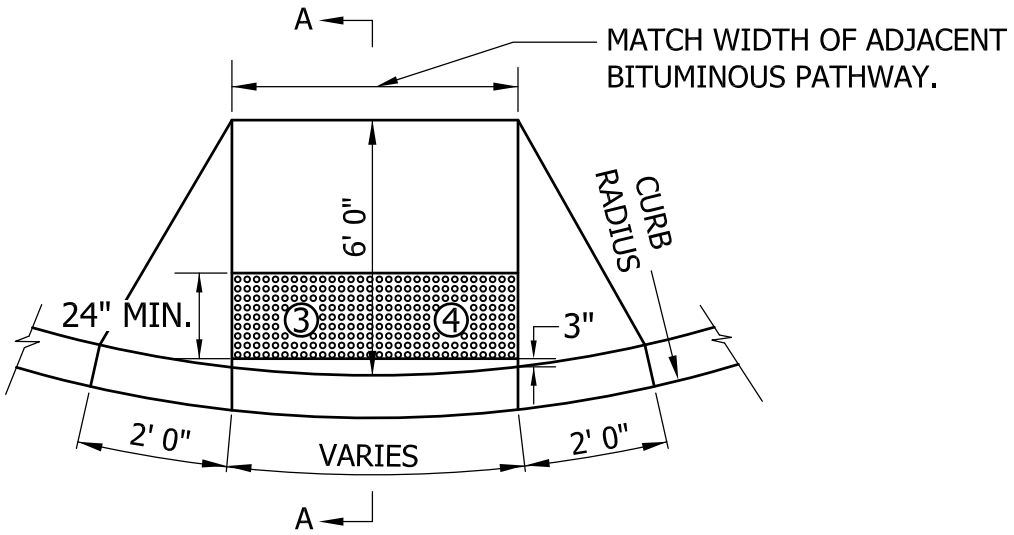


PLAN VIEW OF RAMP

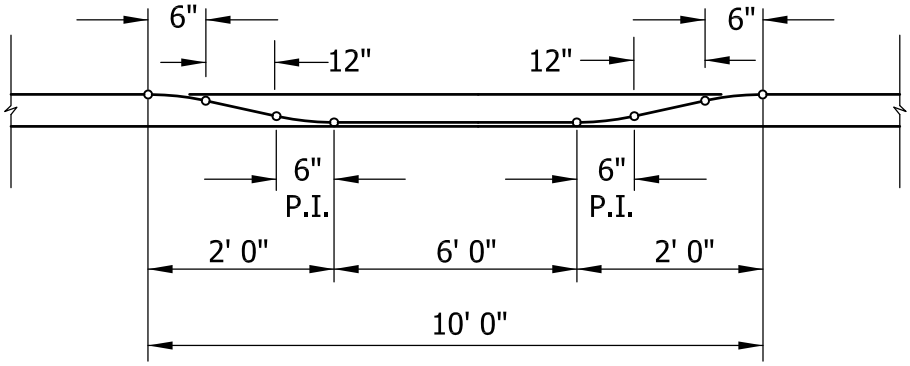


ELEVATION OF RAMP

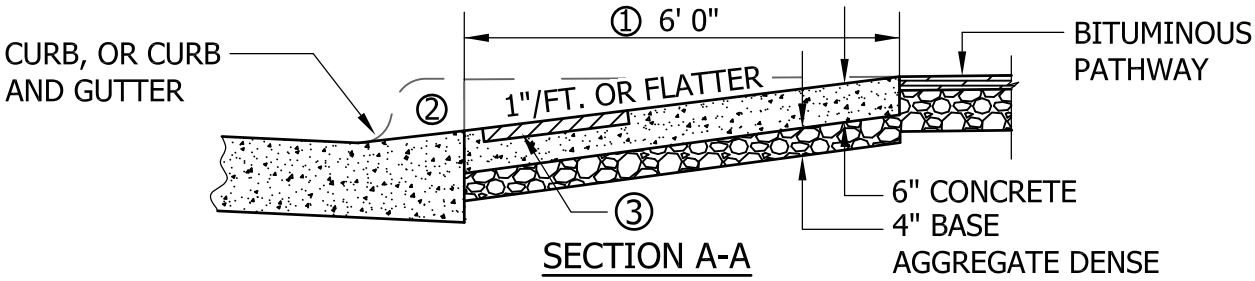


SECTION A-A

NOTES:

THE CURB AND CURB TRANSITION ON THE RAMP WILL BE PAID FOR AS LINEAR FEET OF CONCRETE CURB OR CONCRETE CURB AND GUTTER. THE RAMP AREA WILL BE PAID FOR AS SQUARE FEET OF CONCRETE WALK.

1. 6' 0" DIMENSION MAY BE INCREASED WHERE FEASIBLE TO PROVIDE A FLATTER SLOPE.
2. THE 1"/FT. SLOPE SHALL BE CONSTRUCTED THROUGH THE CURB TO THE GUTTER WITH NO LIP AT THE GUTTER SECTION.
3. ADA REQUIRED TRUNCATED DOMES PER WISDOT STANDARD DETAIL DRAWING 8D5-14E AND WISDOT APPROVED PRODUCTS LIST.
4. TRUNCATED DOMES SHALL BE CAST IRON 'NATURAL FINISH'.

# PEDESTRIAN RAMP (BITUMINOUS PATHWAY)

HUDSON, WISCONSIN

PLATE NO. STR-11

JULY 2013

Hudson, WI

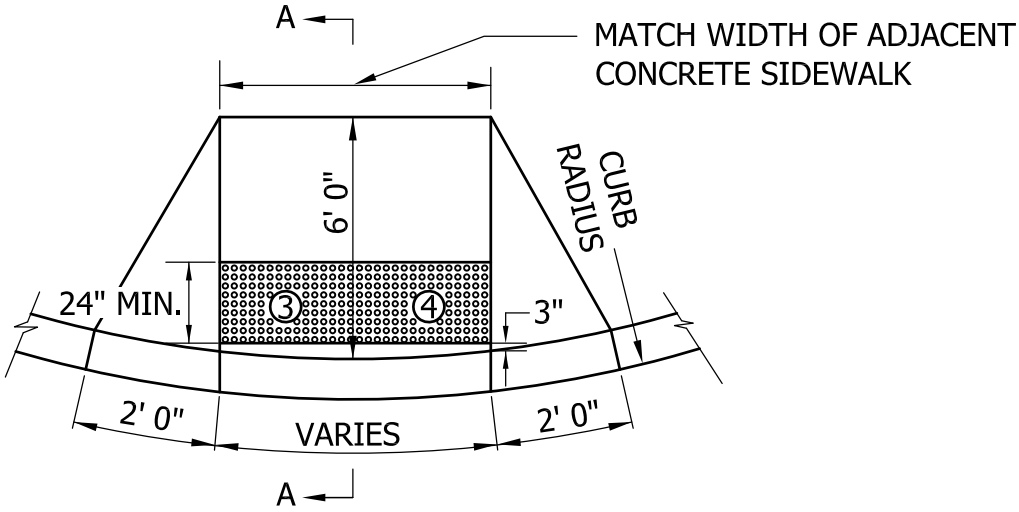


PLAN VIEW OF RAMP

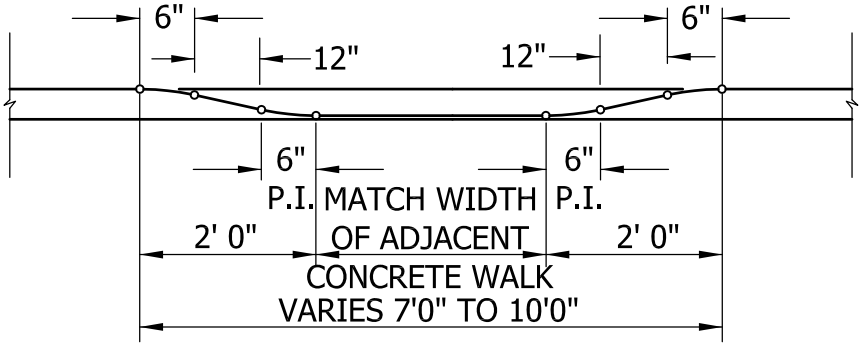


ELEVATION OF RAMP

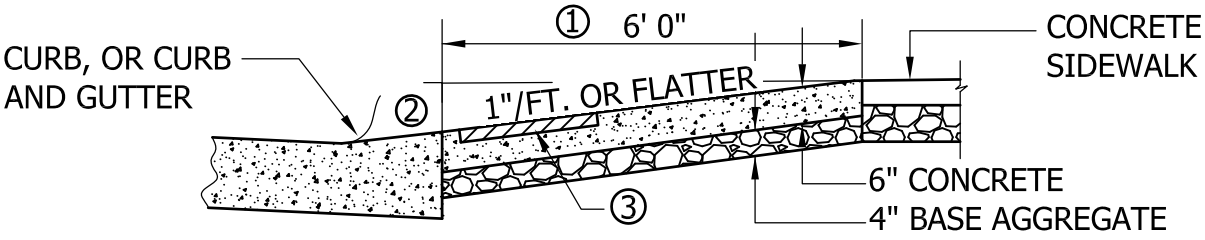


SECTION A-A

NOTES:

THE CURB AND CURB TRANSITION ON THE RAMP WILL BE PAID FOR AS LINEAR FEET OF CONCRETE CURB OR CONCRETE CURB AND GUTTER. THE RAMP AREA WILL BE PAID FOR AS SQUARE FEET OF CONCRETE WALK.

① 6' 0" DIMENSION MAY BE INCREASED WHERE FEASIBLE TO PROVIDE A FLATTER SLOPE.

② THE 1"/FT. SLOPE SHALL BE CONSTRUCTED THROUGH THE CURB TO THE GUTTER WITH NO LIP AT THE GUTTER SECTION.

③ ADA REQUIRED TRUNCATED DOMES PER WISDOT STANDARD DETAIL DRAWING 8D5-14E AND WISDOT APPROVED PRODUCTS LIST.

④ TRUNCATED DOMES SHALL BE CAST IRON 'NATURAL FINISH'.

## PEDESTRIAN RAMP (CONCRETE SIDEWALK)

HUDSON, WISCONSIN

PLATE NO. STR-12

JULY 2013

Hudson, WI

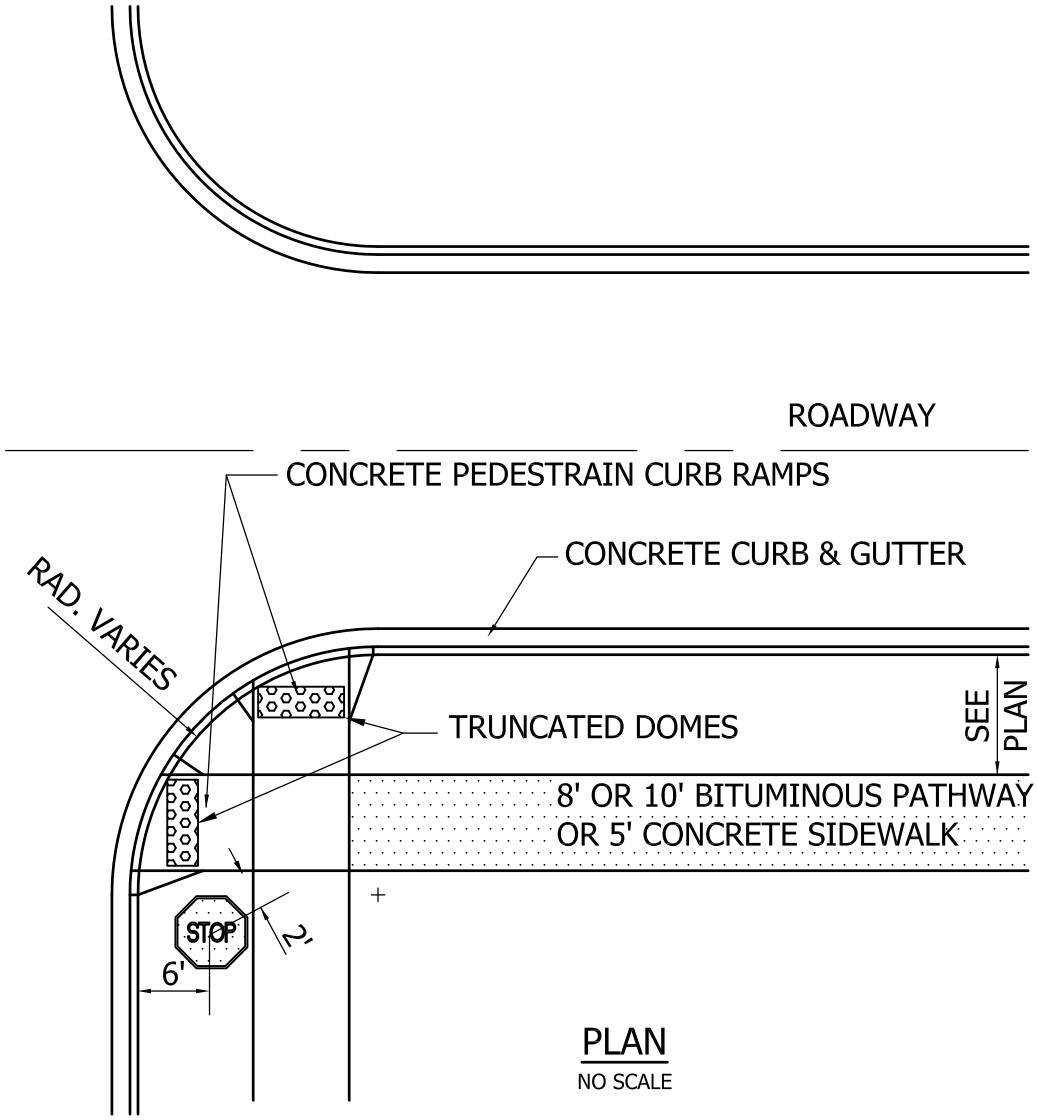


PLAN

NO SCALE

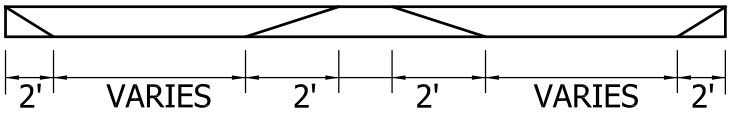


PROFILE

NO SCALE

# DOUBLE PEDESTRIAN CURB RAMP GENERAL LOCATION

HUDSON, WISCONSIN

PLATE NO. STR-13

MARCH 2013

Hudson, WI

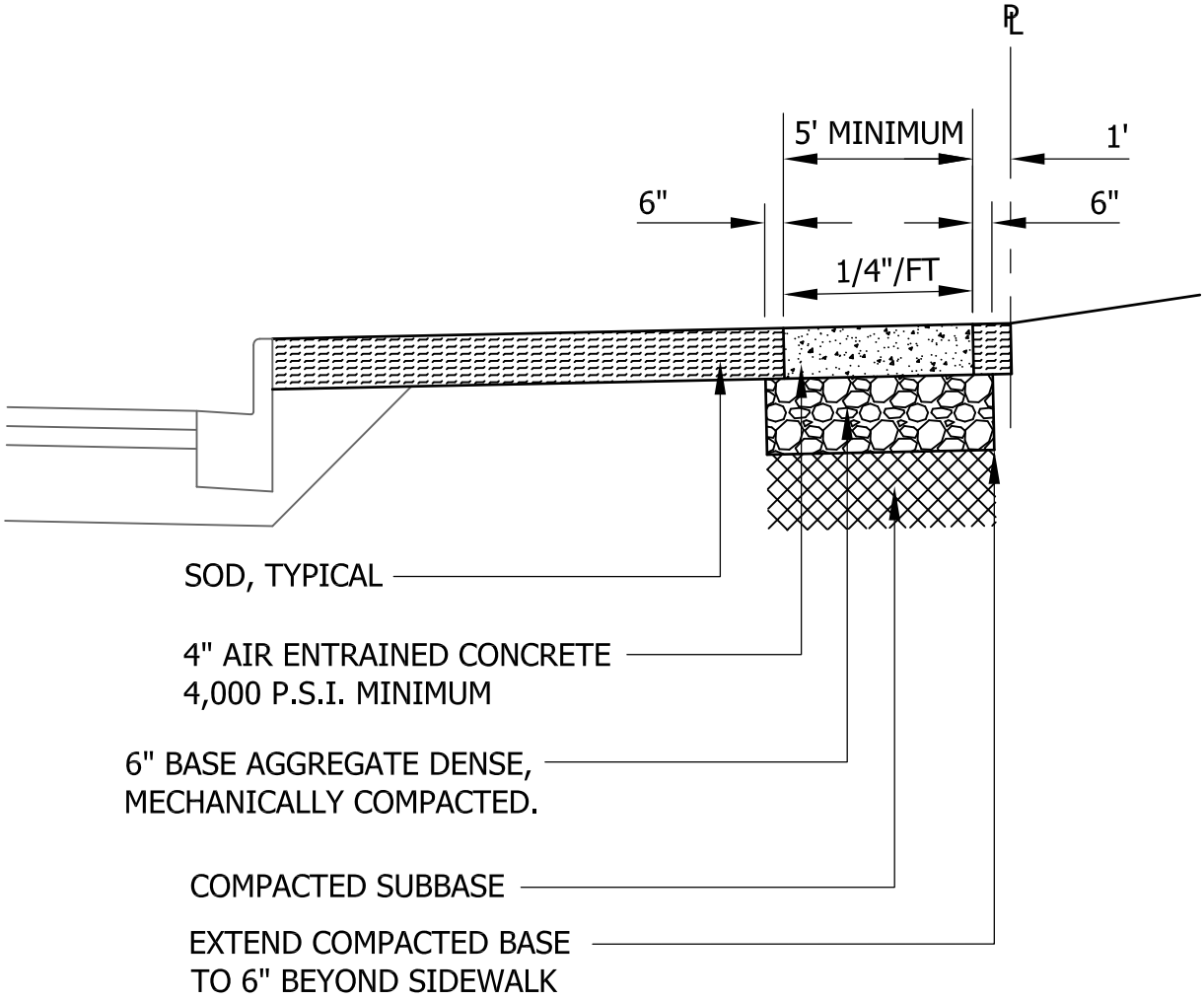


# TYPICAL CONCRETE SIDEWALK

HUDSON, WISCONSIN

PLATE NO. STR-14

JULY 2013

Hudson, WI

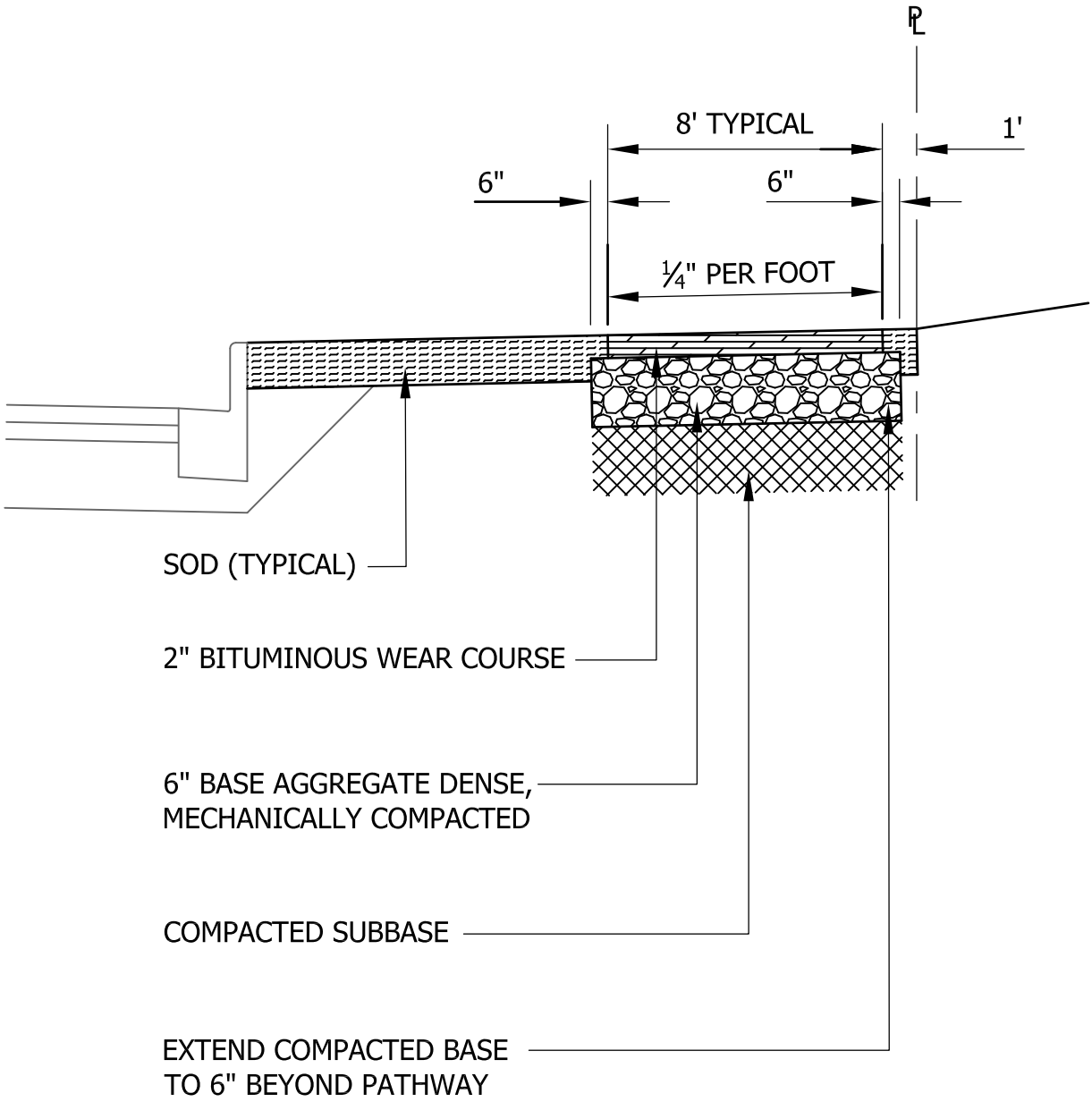


# TYPICAL BITUMINOUS PATHWAY

HUDSON, WISCONSIN

PLATE NO. STR-15

JULY 2013

Hudson, WI

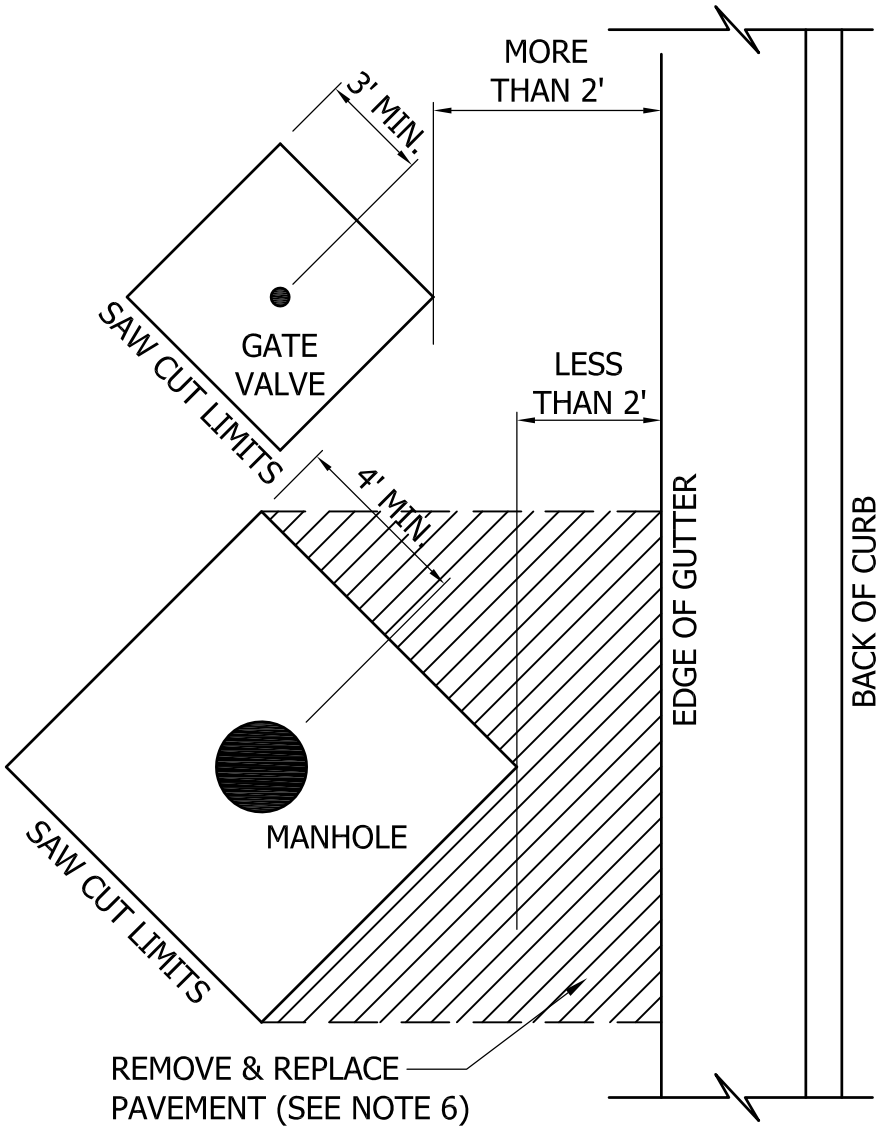


NOTES:

1. SAW CUT FULL DEPTH THROUGH BITUMINOUS AND CONCRETE PAVEMENT SQUARE (DIAMOND-SHAPED RELATIVE TO THE ROADWAY) A MINIMUM OF 4' FROM CENTER FOR MANHOLES AND A MINIMUM OF 3' FROM CENTER FOR GATE VALVES.
2. THESE REMOVAL DIMENSIONS SHALL MINIMALLY ALLOW FOR VIBRATORY PLATE COMPACTION TO OPERATE PROPERLY.
3. ADJUST ALL SIDES OF STRUCTURES 1/2" LOWER THAN ADJACENT FINAL GRADE, MATCHING STREET GRADES AND CROSS-SLOPES.
4. UTILIZE 1/2"-THICK PUCKS ON GATE VALVES AND 1/2"-THICK CIRCULAR PLATES ON MANHOLES FOR ALL PAVING OF STREETS, DRIVEWAYS, PATHS AND PARKING AREAS.
5. CLEAN ALL LIDS OF ALL GRAVEL, BITUMINOUS OR CONCRETE DURING PAVING OPERATIONS WHILE BITUMINOUS IS HOT AND/OR CONCRETE IS PLASTIC.
6. ANY SAW CUT CLOSER THAN 2' TO THE EDGE OF THE GUTTER SHALL BE EXTENDED TO THE EDGE OF THE GUTTER AND THAT ADDITIONAL PAVEMENT REMOVED AND REPLACED, AS DIRECTED BY THE CITY.

# STRUCTURE ADJUSTMENT (BITUMINOUS OR CONCRETE)

HUDSON, WISCONSIN

PLATE NO. STR-16

MARCH 2013

Hudson, WI

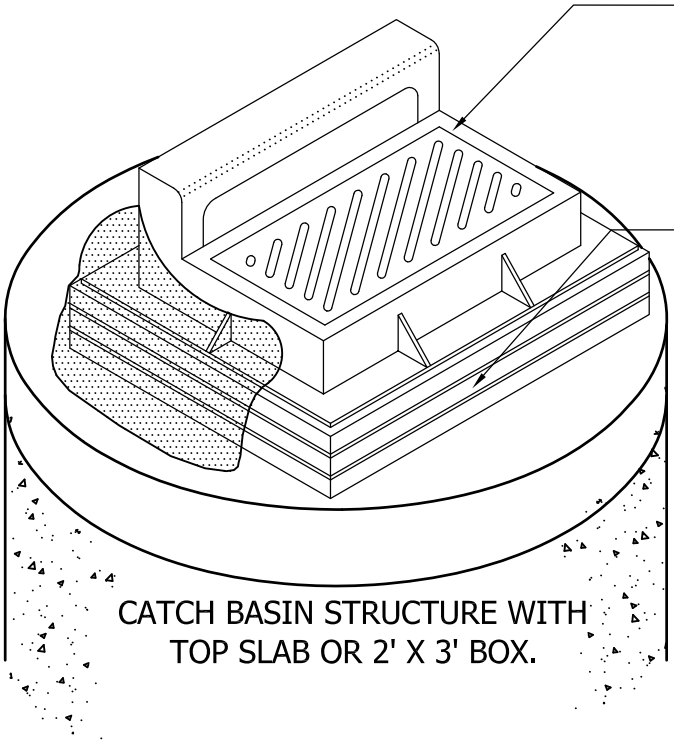

NEENAH R3067V CATCH BASIN FRAME AND GRATE. SHALL BE FURNISHED WITH CURB INLET BOX AND 3" DIA. FRONT FACE AND 4" MAXIMUM OPENING.

CONCRETE ADJUSTMENT RINGS. MIN. OF 2", MAX. OF 12" WITH A MIN. 3/8" MORTAR BETWEEN TOP SLAB AND FIRST RING. WOVEN FILTER FABRIC THEN SHALL BE WRAPPED AROUND ENTIRE SYSTEM AS SPECIFIED.

CATCH BASIN STRUCTURE WITH TOP SLAB OR 2' X 3' BOX.

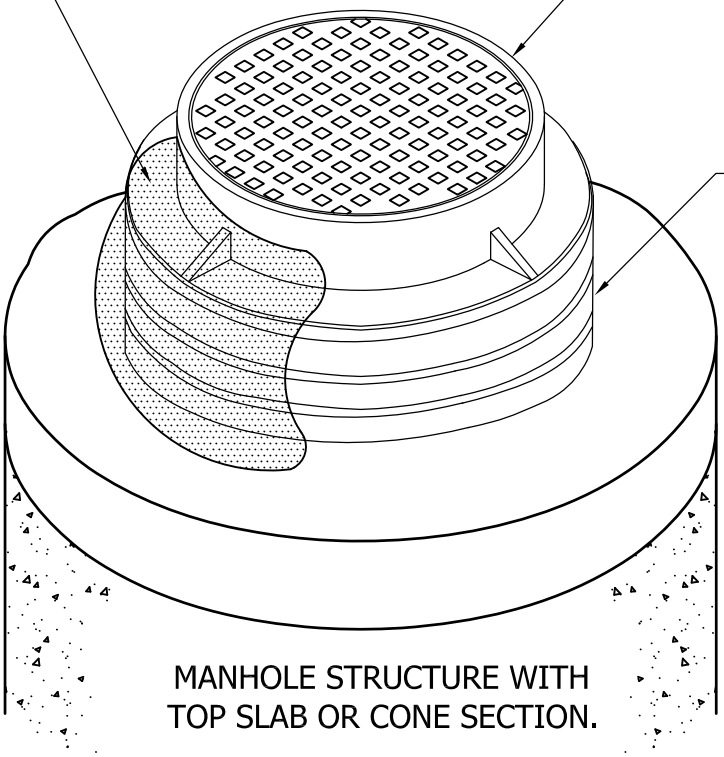


NEENAH R1642B MANHOLE FRAME AND COVER. SHALL BE FURNISHED WITH 2 CONCEALED PICK HOLES AND STAMPED "SANITARY SEWER" OR "STORM SEWER".

CONCRETE ADJUSTMENT RINGS. MIN. OF 2", MAX. OF 12", BONDED TO THE STRUCTURE, CASTING,AND EACH OTHER BY APPROVED SEALANT. WOVEN FILTER FABRIC THEN SHALL BE WRAPPED AROUND THE ENTIRE SYSTEM AS SPECIFIED.

MANHOLE STRUCTURE WITH TOP SLAB OR CONE SECTION.

## CONCRETE ADJUSTMENT RING DETAIL

HUDSON, WISCONSIN

PLATE NO. STR-17

MARCH 2013

Hudson, WI

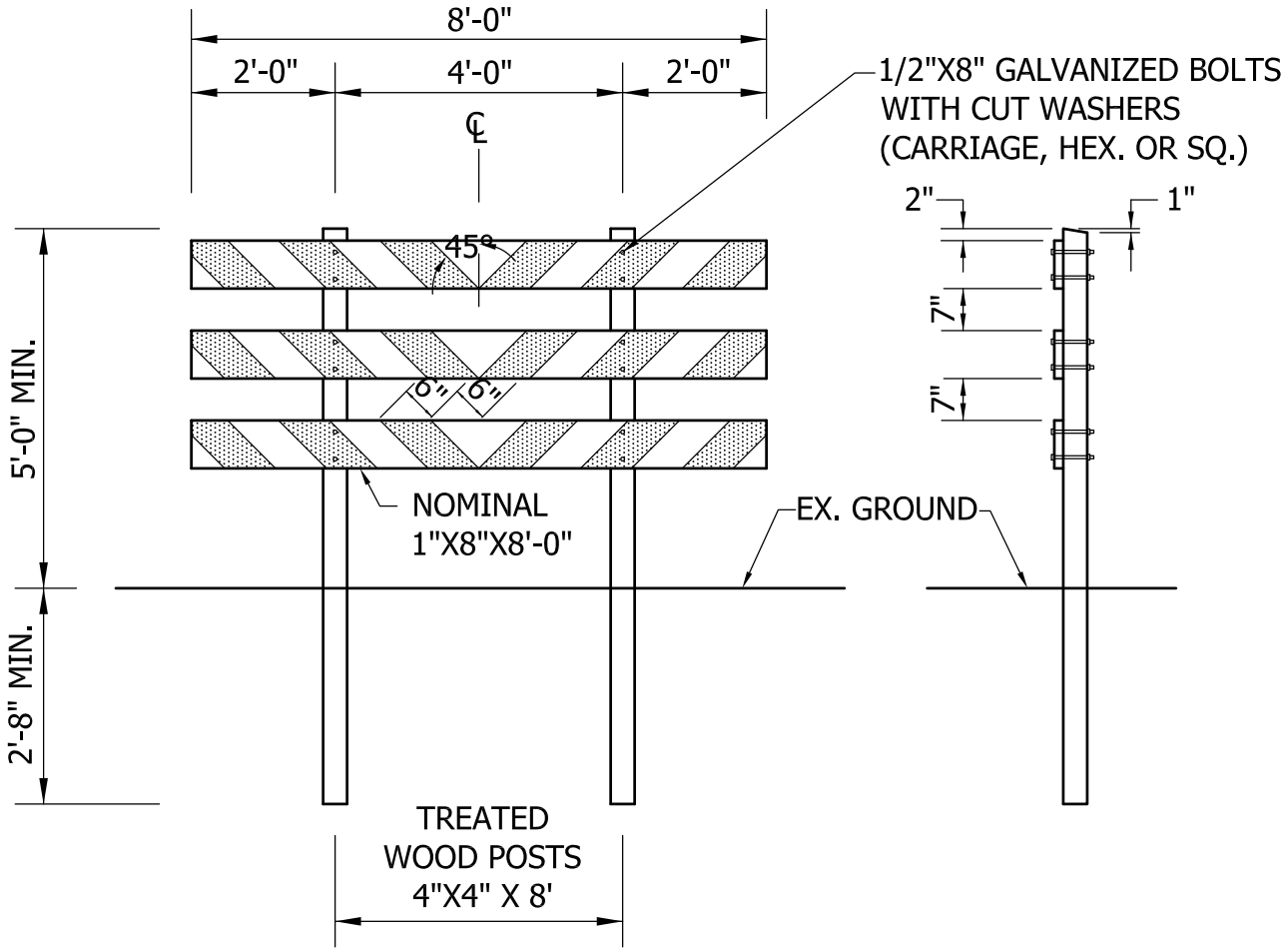


NOTES:

THE BARRICADE BOARD FACE SURFACES SHALL BE FULLY REFLECTORIZED IN ALTERNATE SILVER-WHITE AND RED STRIPING, USING HIGH INTENSITY RETRO REFLECTIVE SHEETING CONFORMING TO THE REQUIREMENTS OF WISDOT SPEC. 637.2.2.2, TYPE H REFLECTIVE SHEETING.

PRIOR TO INSTALLING THE REFLECTIVE SHEETING, THE BARRICADE BOARDS SHALL BE GIVEN A COMPLETE COATING OF WHITE PAINT FOR WOOD (PRIMER COAT) CONFORMING TO WISDOT SPEC. 517.2.6, FOLLOWED BY A SECOND COAT OF WHITE PAINT FOR WOOD (FINISH COAT) CONFORMING TO WISDOT SPEC. 517.2.7 APPLIED ONLY TO THE SURFACES NOT COVERED WITH REFLECTIVE SHEETING.

THE BARRICADE BOARDS SHALL BE COMPLETELY PAINTED AND REFLECTORIZED SHEETING APPLIED BEFORE BEING INSTALLED ON THE POSTS.

THE PLACEMENT OF THE BARRICADE SHALL BE 10'-0" FROM THE END OF THE BITUMINOUS ROAD WITH THE BARRICADE CENTERED ON THE ROADWAY FACING THE FLOW OF TRAFFIC.

## PERMANENT BARRICADE

HUDSON, WISCONSIN

PLATE NO. STR-18

MARCH 2013

Hudson, WI

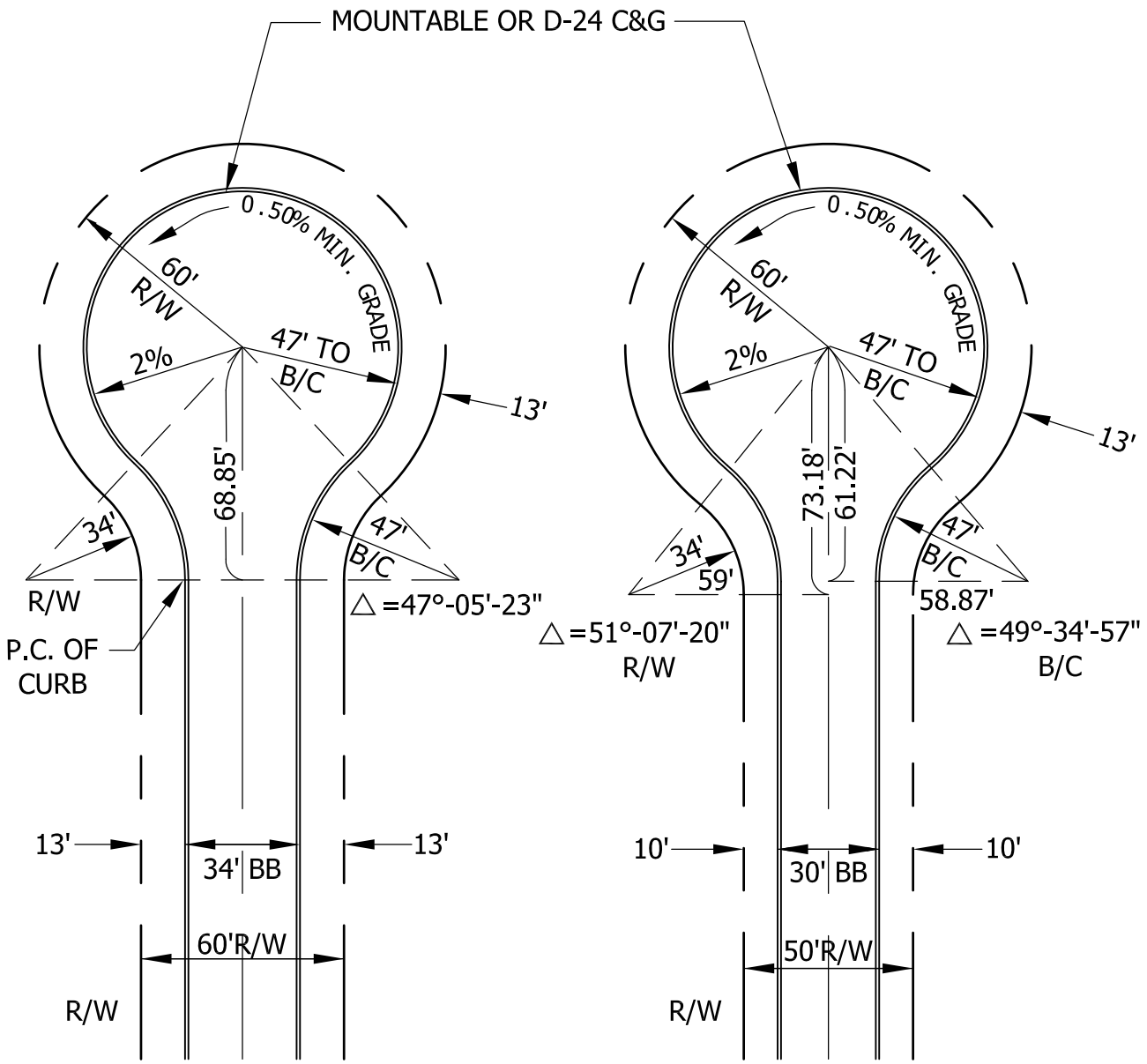


NOTE:
IF SIDEWALK EXTENDS PART WAY AROUND CUL-DE-SAC, HYDRANT TO BE LOCATED ON LOT LINE WHERE NO SIDEWALK EXISTS.

# TYPICAL COMMERCIAL CUL-DE-SAC FOR 50' & 60' RIGHT-OF-WAYS

HUDSON, WISCONSIN

PLATE NO. STR-19

MARCH 2013

Hudson, WI

CENTER ISLANDS ARE TO BE MAINTENANCE FREE OR
ELSE MAINTAINED BY HOMEOWNERS ASSOCIATION

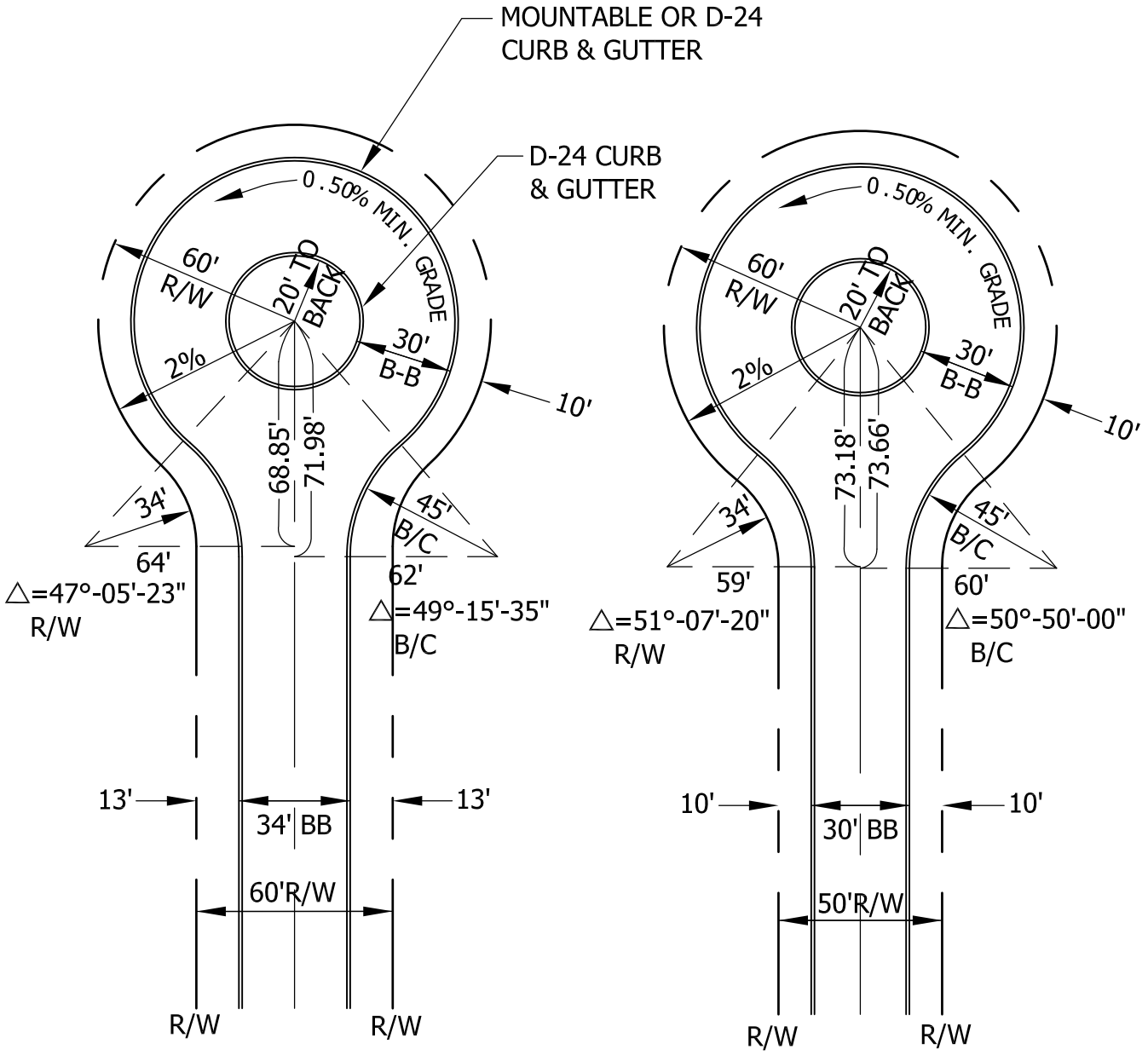


NOTE:
IF SIDEWALK EXTENDS PART WAY
AROUND CUL-DE-SAC. HYDRANT
TO BE LOCATED ON LOT LINE
WHERE NO SIDEWALK EXISTS.

TYPICAL RESIDENTIAL CUL-DE-SAC WITH
CENTER ISLAND FOR 50' & 60' RIGHT-OF-WAYS

HUDSON, WISCONSIN PLATE NO. STR-20

MARCH 2013

Hudson, WI

NOTE:
LOCATE HYDRANT ON LOT
LINE ON BULB SIDE OF C-D-S

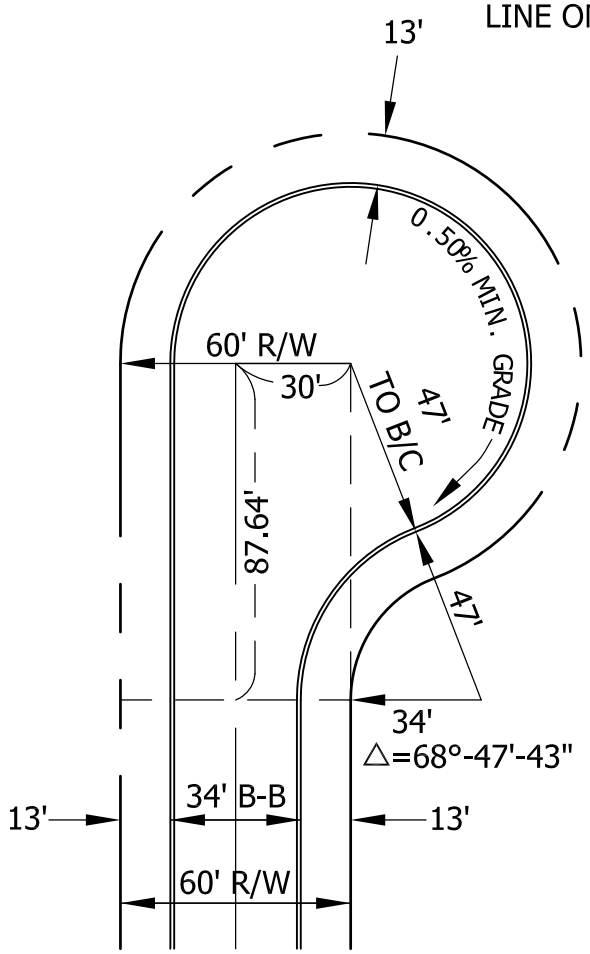


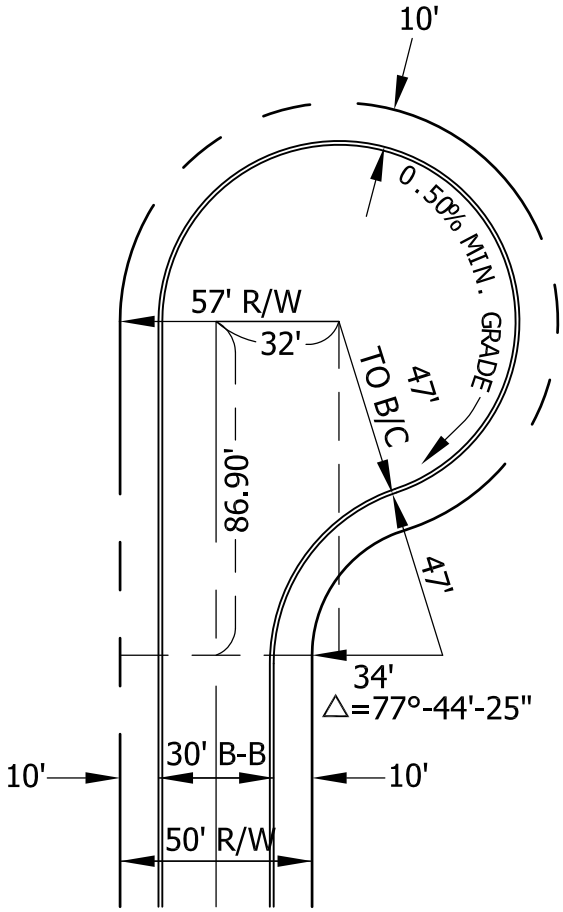


NOTES:

1. IF SIDEWALK EXTENDS PART WAY AROUND CUL-DE-SAC. HYDRANT TO BE LOCATED ON LOT LINE WHERE NO SIDEWALK EXISTS.

2. TYPICAL COMMERCIAL ECCENTRIC CUL-DE-SAC SHOWN. TYPICAL RESIDENTIAL ECCENTRIC CUL-DE-SAC SHALL INCLUDE CENTER ISLANDS WITH 20' RADIUS TO BACK OF TYPICAL CURB AND GUTTER.

# TYPICAL ECCENTRIC CUL-DE-SAC FOR 50' & 60' RIGHT-OF-WAYS

HUDSON, WISCONSIN

PLATE NO. STR-21

MARCH 2013

Hudson, WI

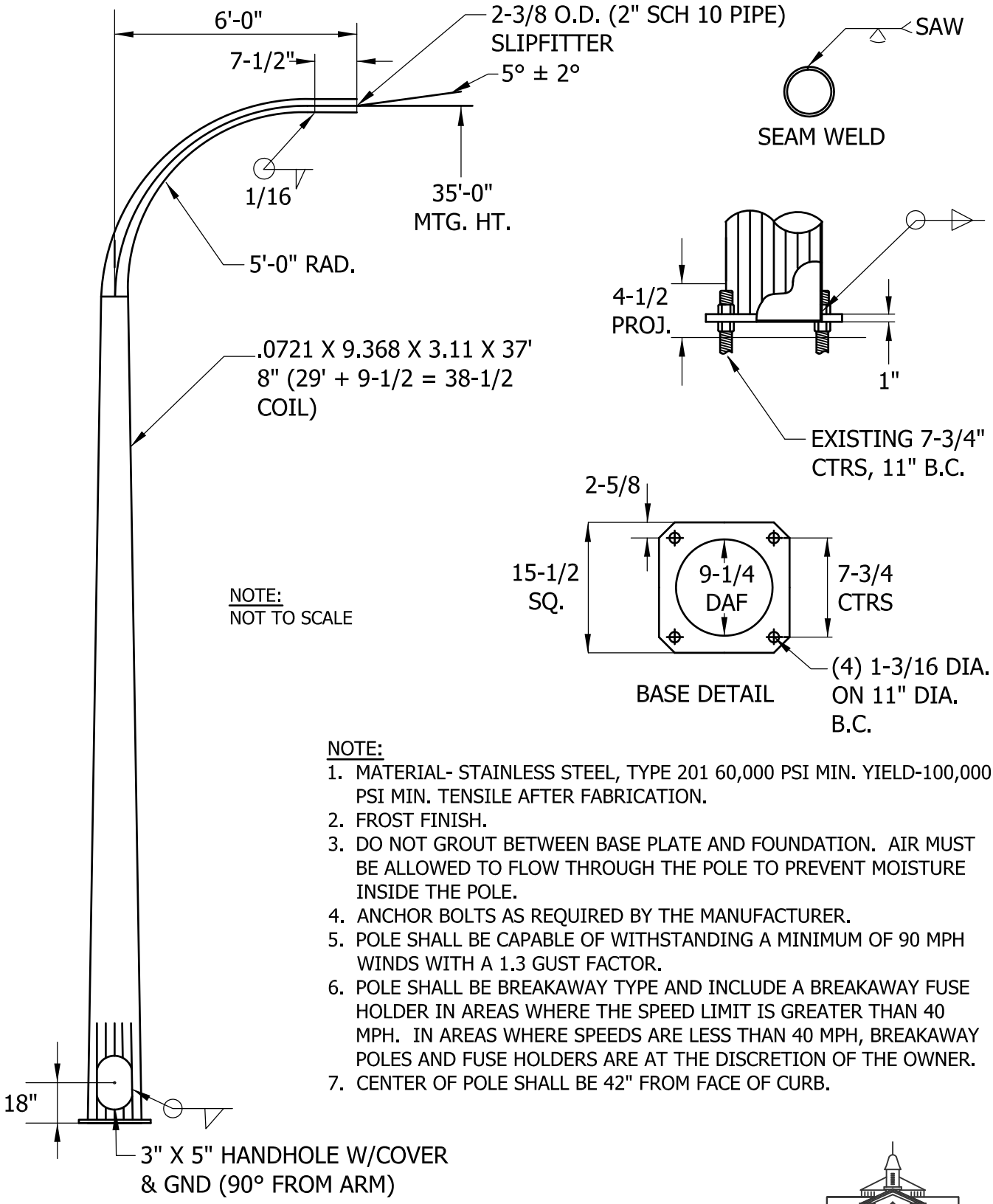


NOTE:
NOT TO SCALE

NOTE:

1. MATERIAL- STAINLESS STEEL, TYPE 201 60,000 PSI MIN. YIELD-100,000 PSI MIN. TENSILE AFTER FABRICATION.
2. FROST FINISH.
3. DO NOT GROUT BETWEEN BASE PLATE AND FOUNDATION. AIR MUST BE ALLOWED TO FLOW THROUGH THE POLE TO PREVENT MOISTURE INSIDE THE POLE.
4. ANCHOR BOLTS AS REQUIRED BY THE MANUFACTURER.
5. POLE SHALL BE CAPABLE OF WITHSTANDING A MINIMUM OF 90 MPH WINDS WITH A 1.3 GUST FACTOR.
6. POLE SHALL BE BREAKAWAY TYPE AND INCLUDE A BREAKAWAY FUSE HOLDER IN AREAS WHERE THE SPEED LIMIT IS GREATER THAN 40 MPH. IN AREAS WHERE SPEEDS ARE LESS THAN 40 MPH, BREAKAWAY POLES AND FUSE HOLDERS ARE AT THE DISCRETION OF THE OWNER.
7. CENTER OF POLE SHALL BE 42" FROM FACE OF CURB.

## 37'-8" COMMERCIAL LIGHT

HUDSON, WISCONSIN

PLATE NO. STR-22

MARCH 2013

Hudson, WI

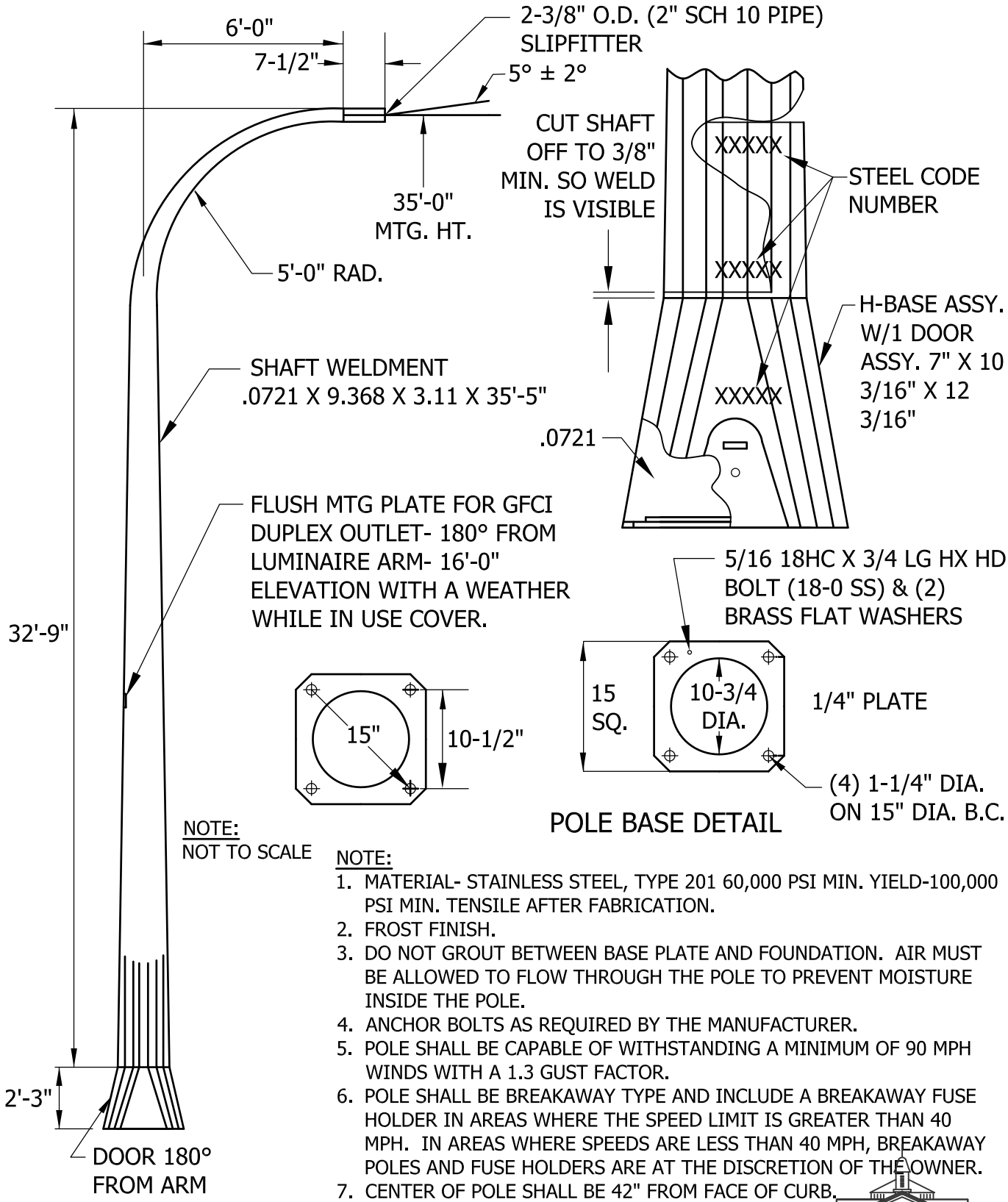


NOTE:
NOT TO SCALE

NOTE:

1. MATERIAL- STAINLESS STEEL, TYPE 201 60,000 PSI MIN. YIELD-100,000 PSI MIN. TENSILE AFTER FABRICATION.
2. FROST FINISH.
3. DO NOT GROUT BETWEEN BASE PLATE AND FOUNDATION. AIR MUST BE ALLOWED TO FLOW THROUGH THE POLE TO PREVENT MOISTURE INSIDE THE POLE.
4. ANCHOR BOLTS AS REQUIRED BY THE MANUFACTURER.
5. POLE SHALL BE CAPABLE OF WITHSTANDING A MINIMUM OF 90 MPH WINDS WITH A 1.3 GUST FACTOR.
6. POLE SHALL BE BREAKAWAY TYPE AND INCLUDE A BREAKAWAY FUSE HOLDER IN AREAS WHERE THE SPEED LIMIT IS GREATER THAN 40 MPH. IN AREAS WHERE SPEEDS ARE LESS THAN 40 MPH, BREAKAWAY POLES AND FUSE HOLDERS ARE AT THE DISCRETION OF THE OWNER.
7. CENTER OF POLE SHALL BE 42" FROM FACE OF CURB.

# 35'-8" COMMERCIAL LIGHT

HUDSON, WISCONSIN

PLATE NO. STR-23

MARCH 2013

Hudson, WI

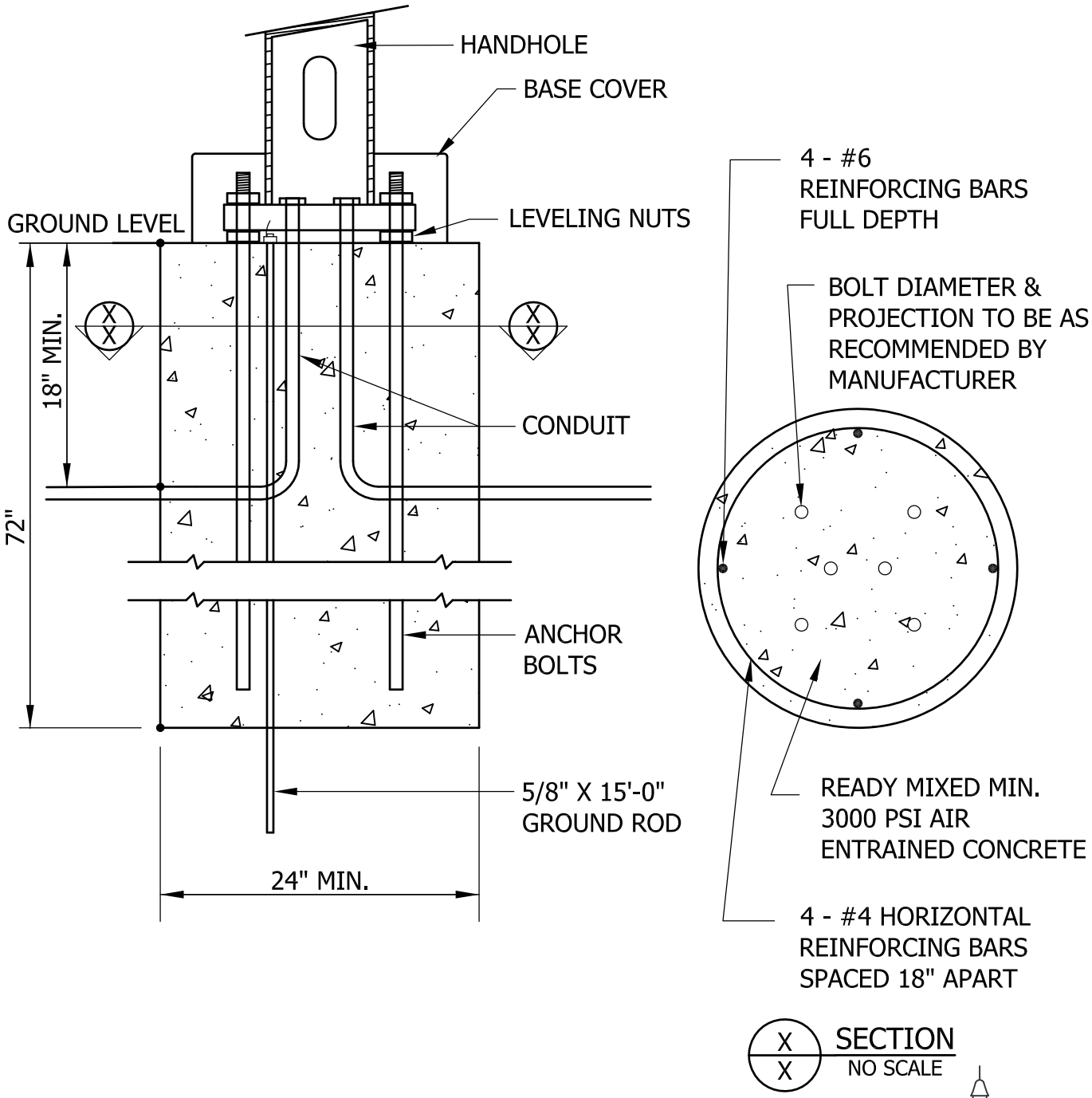


# CONCRETE BASE FOR UP TO 40' LIGHTING STANDARDS

HUDSON, WISCONSIN

PLATE NO. STR-24

MARCH 2013

Hudson, WI

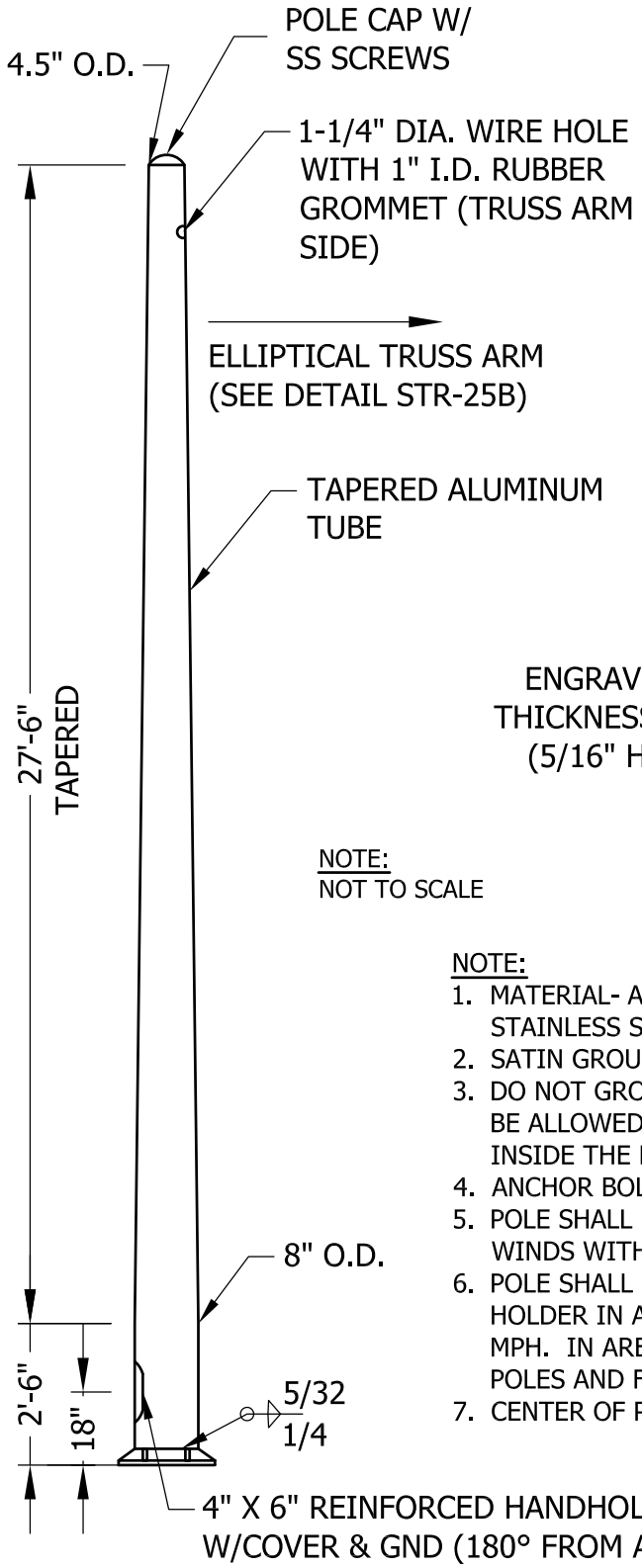


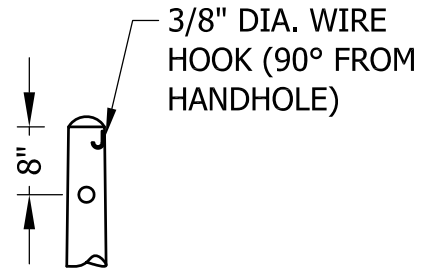


TOP DETAIL

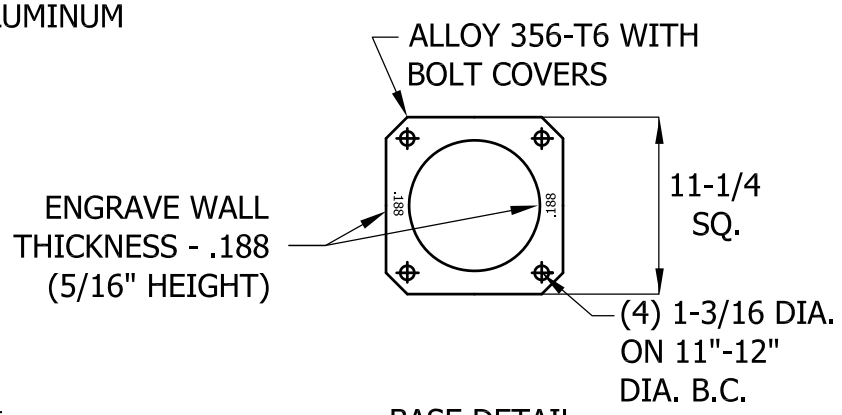


BASE DETAIL

NOTE:
NOT TO SCALE

NOTE:

1. MATERIAL- ALUMINUM TUBE ALLOY 6063-T6, 0.188" WALL THICKNESS. STAINLESS STEEL FASTENERS.
2. SATIN GROUND FINISH.
3. DO NOT GROUT BETWEEN BASE PLATE AND FOUNDATION. AIR MUST BE ALLOWED TO FLOW THROUGH THE POLE TO PREVENT MOISTURE INSIDE THE POLE.
4. ANCHOR BOLTS AS REQUIRED BY THE MANUFACTURER.
5. POLE SHALL BE CAPABLE OF WITHSTANDING A MINIMUM OF 90 MPH WINDS WITH A 1.3 GUST FACTOR.
6. POLE SHALL BE BREAKAWAY TYPE AND INCLUDE A BREAKAWAY FUSE HOLDER IN AREAS WHERE THE SPEED LIMIT IS GREATER THAN 40 MPH. IN AREAS WHERE SPEEDS ARE LESS THAN 40 MPH, BREAKAWAY POLES AND FUSE HOLDERS ARE AT THE DISCRETION OF THE OWNER.
7. CENTER OF POLE SHALL BE 42" FROM FACE OF CURB.

# 30'-8" COMMERCIAL LIGHT TAPERED ALUMINUM POLE (1 0F 2)

HUDSON, WISCONSIN

PLATE NO. STR-25A

MARCH 2013

Hudson, WI

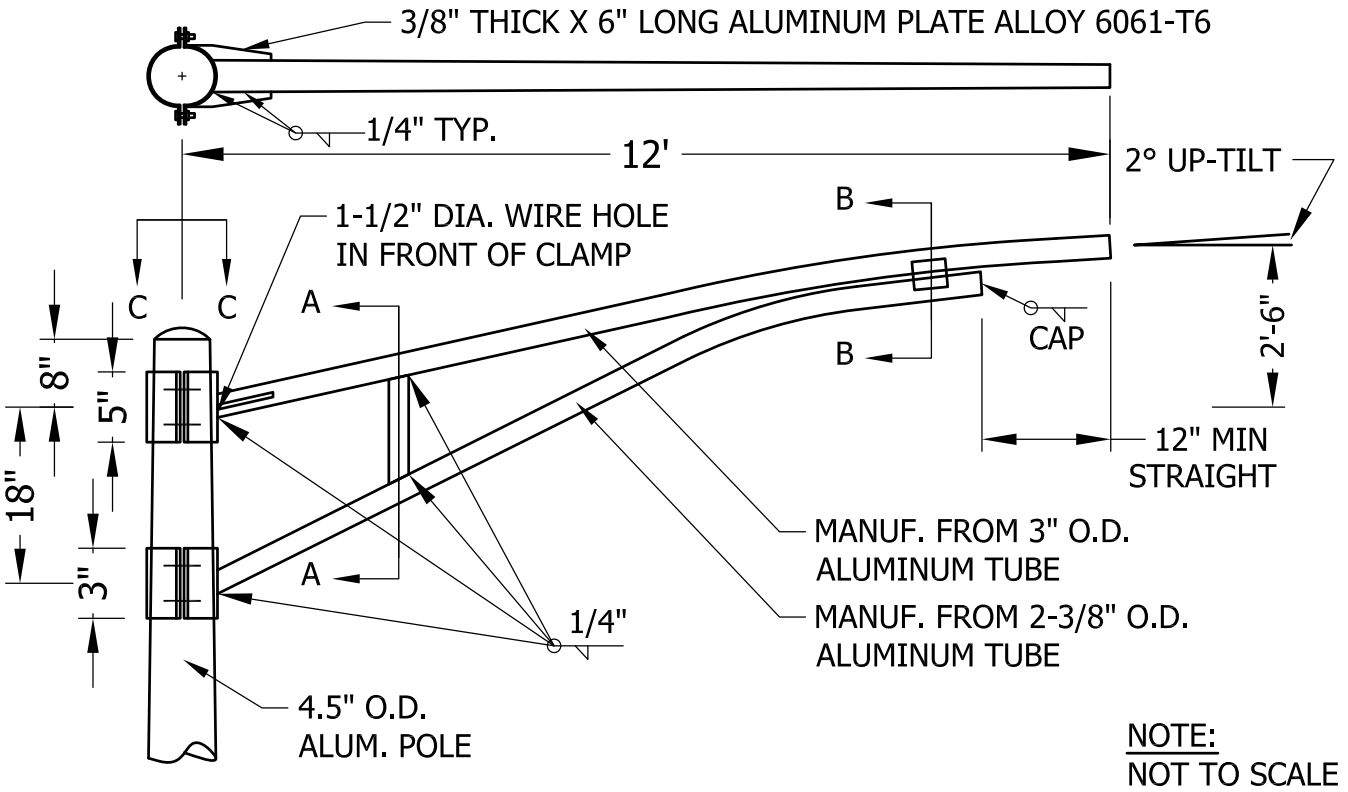


NOTE:
NOT TO SCALE

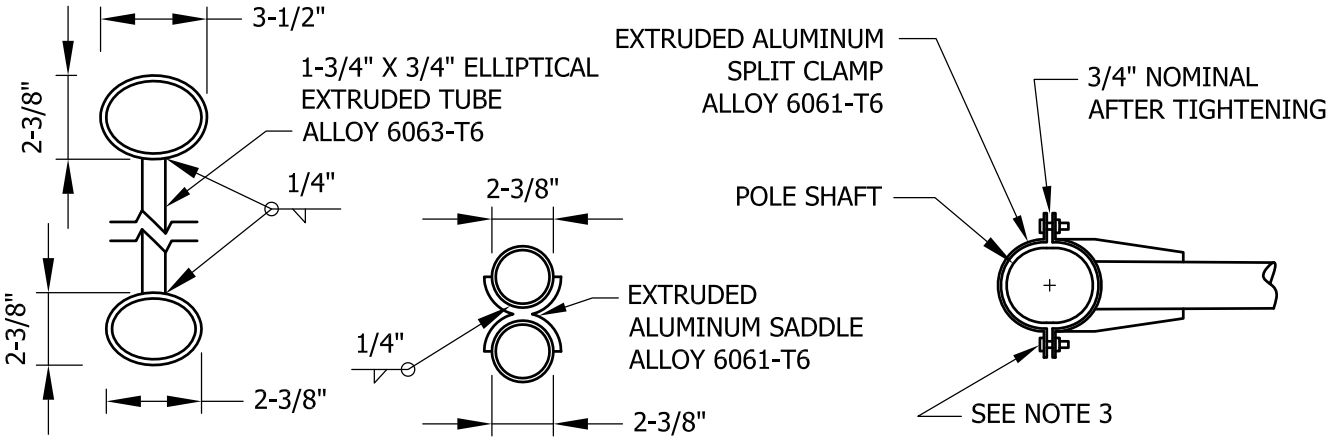


SECTION A-A SECTION B-B SECTION C-C

NOTE:

1. MATERIALS: ALUMINUM TUBE - ALLOY 6063-T6, 0.125" WALL THICKNESS, OR AS NOTED.
   WELDS - ALUMINUM ALLOY 4043.
2. SATIN GROUND FINISH.
3. EXTRUDED SPLIT CLAMPS CONNECTED TO POLE SHAFT WITH (8) 1/2"-15NC, 2-1/2" LONG HEX HEAD CAP SCREWS WITH (16) 1/2" FLATS, (8) 1/2" LOCKS AND (8) 1/2" NUTS, ALL STAINLESS STEEL 18-8.
4. ALUMINUM POLE - SEE DETAIL STR-25A.

# 30'-8" COMMERCIAL LIGHT ELLIPTICAL TRUSS ARM (2 0F 2)

HUDSON, WISCONSIN

PLATE NO. STR-25B

MARCH 2013

Hudson, WI